SIM2 Multimedia S.p.a. • Viale Lino Zanussi, 11 • 33170 Pordenone - ITALY
Phone +39.434.383.253-256 • Fax +39.434.383260-261
www.sim2.com • e-mail: info@sim2.it

SIM2 USA Inc. • 10108 USA Today Way • 33025 Miramar FL - USA
Phone +1.954.4422999 • Fax +1.954.4422998
www.sim2usa.com • e-mail: sales@sim2usa.com

SIM2 Deutschland GmbH • Gewerbepark, 17 D-35606 Solms
Phone 0800.800.7462 • Fax 0800.900.7462
www.sim2.com • e-mail: info.de@sim2.it

SIM2 UK LTD • Steinway House Worth Farm,
Little Horsted Nr. Uckfield, East Sussex TN22 5TT
Phone +44.01825.750850 • Fax +44.01825.750851
www.sim2.co.uk • e-mail: kate.buckle@sim2.co.uk

SIM2 Multimedia is certified

UNI EN ISO 9001

• Due to the constant product development, specifictions and design might be subject to change without a notice.

INDEX

Setup

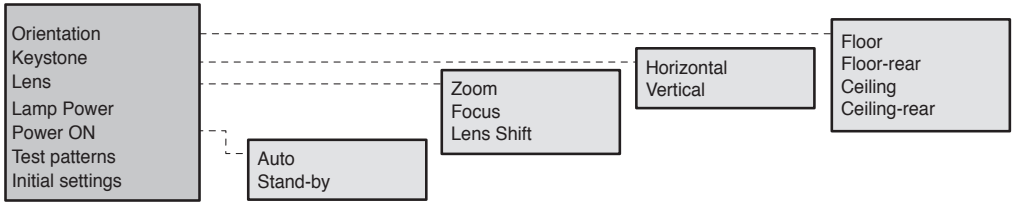

Menu

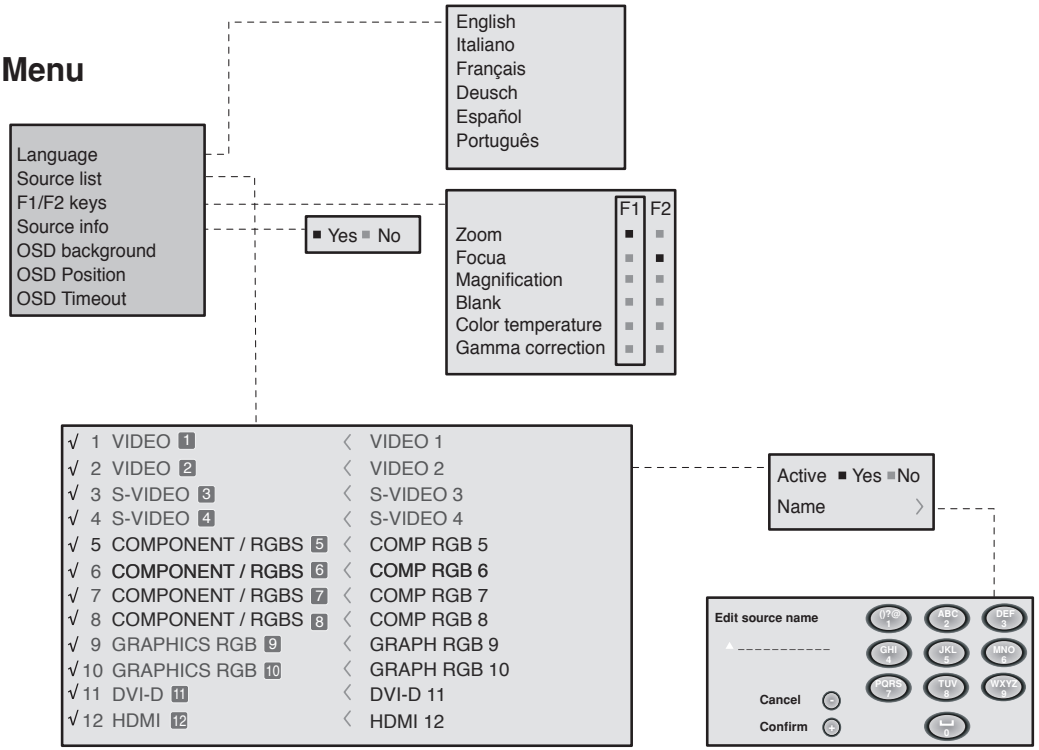

Memories

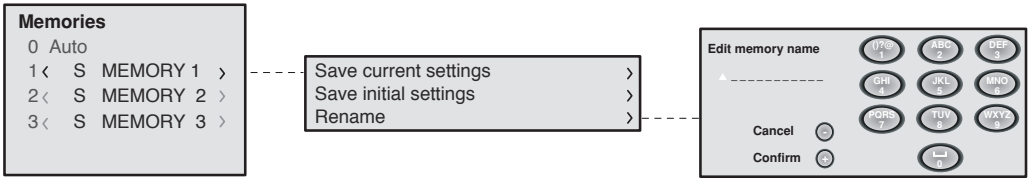

C ON SCREEN MENU LAYOUT

Picture

Video • S-Video [NTSC]
YCrCb15kHz
RGBS 15kHz

Brightness
Contrast
Color
Tint
Sharpness
Filter
Cinema Mode
Video Type
Noise reduction

Video • S-Video [PAL, SECAM]

Brightness
Contrast
Color
Sharpness
Filter
Cinema Mode
Video Type
Noise reduction

YCrCb

Brightness
Contrast
Color
Tint
Sharpness
Sharpness Mode

RGBS
RGB Grafico
DVI-D
HDMI™

Brightness
Contrast
Sharpness
Sharpness Mode

■ Not active ■ Auto ■ Manual

Flesh tone correction ■ On ■ Off

Value
Flesh tone correction ■ On ■ Off

Image

Video • S-Video

Aspect
Color Temperature
Gamma Correction
Overscan
Position
Y/C Delay

YCrCb 15kHz
RGBS 15kHz

Aspect
Color Temperature
Gamma Correction
Overscan
Position

YCrCb
RGB
RGB Grafico

Aspect
Color Temperature
Gamma Correction
Overscan
Position
Frequency
Phase

DVI-D
HDMI™

Aspect
Color Temperature
Gamma Correction
Overscan

Aspect

Normal
Anamorphic
Letterbox
Panoramic
Pixel to Pixel
User 1
User 2
User 3

Horizontal
Vertical
Screen control

Horizontal
Vertical
Screen control

Horizontal
Vertical
Screen control

B DIMENSIONS

PROJECTOR

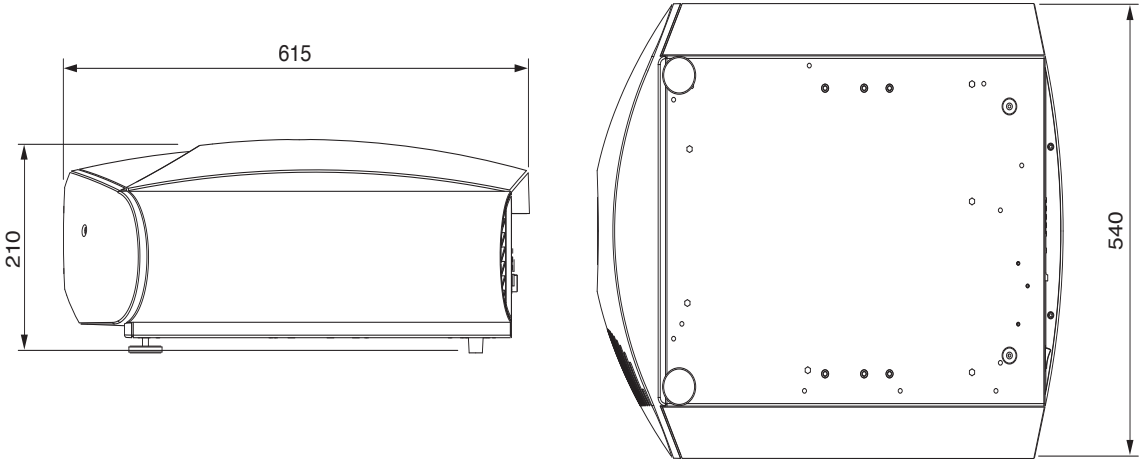

unit: mm

DIGIOPTIC™ IMAGE PROCESSOR

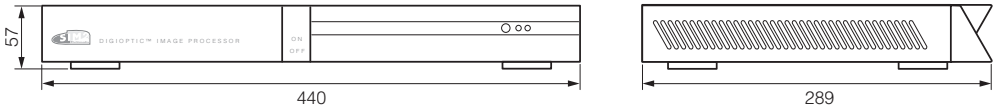

unit: mm

Outputs:	- 2 12-V jack connector outputs (1 active with system powered on, 1 active with 16:9 aspect ratio selected) - 1 Optical S/PDIF audio output Toslink connector

GENERAL DIGIOPTIC™ IMAGE PROCESSOR

Power supply cable:	(EU, UK and US); length 2 m
Power supply:	100 to 240 VAC, tolerance ± 10%, frequency from 48 to 62 Hz
Consumption:	30W max
Dimensions:	440 x 57 x 289 mm (WxHxD); compatible with 19" rack
Weight (approx.):	2.5 kg
Operating Temperature:	10 to 35 °C
Transportation temperature:	-15 to 55 °C
Storage temperature:	-15 to 55 °C
Humidity:	20% to 95% non-condensing
Safety:	EN 60950, UL 60950
Transportability:	desktop equipment
Electromagnetic compatibility:	EN 55022 Class B EN 55024 EN 61000-3-2 EN 61000-3-3
Transport:	IEC 68-2-31, IEC 68-2-32

LINK CABLE

Composition:	three 50/125 μm multimode optical fibre cables
Connectors:	LC type
Length:	20.0±0.2m
Diameter:	5 mm max
Tensile strength:	1200N*
Type Approval:	UL OFNP

*traction applied on outer cable, not on fibre cores or connectors.

ELECTRICAL

Input/Output:	3-channel fibre
Control:	Panel (keypad), remote control

GENERAL PROJECTOR

Power supply cable:	(EU, UK e US); lenght 2m
Supply:	da 100 a 240 Vac, tolerance +/- 10% , frequency from 48 to 62 Hz
Consumption:	340 W max
Fuse:	T 5 A H, 5 x 20 mm
Dimensions of projector:	540 x 210 x 615 mm (LxAxP)
Weight of projector:	28 kg
Operation temperature:	10 to 35°C
Transportation temp.:	-15 to 55°C
Storage temperature:	-15 to 55°C
Humidity:	20% a 95% humidity non-condensing
Safety:	EN 60950
Transportability:	desktop equipment
Compatibility:	EN 55022 Class B EN 55024 EN 61000-3-2 EN 61000-3-3
Transportation:	IEC 68-2-31, IEC 68-2-32

DIGIOPTIC™ IMAGE PROCESSOR

ELECTRICAL

Input signals:

- 2 COMPOSITE VIDEO (CVBS)
  - RCA type connectors, gold-plated
  - 1,0 V_{pp} / 75 Ω, negative synchronisation
- 2 S-VIDEO (Y/C)
  - 4-pin mini-DIN connectors
  - Y: 1,0 V_{pp} / 75 Ω, negative synchronisation
  - C: 0,286 V_{pp} / 75 Ω, [NTSC nominal burst level]
  - 0,3 V_{pp} / 75 Ω [PAL, SECAM nominal burst level]
- 4 COMPONENTI (Y/Cr/Cb/H/V) - RGBHV
  - 3 sets of 5 RCA connectors, gold-plated
  - 1 set of 5 BNC type connectors, gold-plated
  - Components signal
    - Y: 1,0 V_{pp} / 75 Ω, negative or 3-level synchronisation
    - Cr,Cb:0,7 V_{pp} / 75 Ω
  - RGB signal
    - R,B:0,7 V_{pp} / 75 Ω
    - G: 0,7 V_{pp} / 75 Ω, separate H/V Sync or H+V Sync
    - 1,0 V_{pp} / 75 Ω,negative or 3-level synchronisation
    - H,V: TTL positive or negative, 0,3-5 V_{pp} / 1 kΩ
- 2 RGBHV (analogue RGB)
  - female DB15HD connectors
  - R,B: 0,7 V_{pp} / 75 Ω
  - G:0.7 V_{pp} / 75 Ω, separate H/V Sync or H+V Sync
  - 1.0 V_{pp} / 75 Ω, negative or 3-level synchronisation
  - H,V: positive or negative TTL, 0.3-5 V_{pp} / 1 kΩ
- 1 DVI (digital RGB)
  - DVI-D female connector
- 1 HDMI™

Input/Output:	3-channel fibre optic link
Control:	Remote control, via RS232 from PC or home automation devices
Horizontal frequency:	from 15 to 80 kHz (up to UXGA, 85 Hz)
Vertical frequency:	48 -100 Hz
Video standards:	automatically selected (PAL B, G, H, I, M, N, 60, SECAM, NTSC 3.58 and 4.43)
High definition video:	ATSC HDTV (480p, 720p, 1080i)
Graphic standards:	VGA, SVGA, XGA, SXGA, UXGA
Deinterlacer:	Faroudja chipset, DCDi™, 3:2 pull-down sequence conversion
Colour temperature:	from 6500 to 10000 K
Control:	infrared remote control, RS232 serial (DB9 connector, female)

12 ADDITIONAL INFORMATION

A TECHNICAL SPECIFICATION

PROJECTOR

OTTICA

Projection system: triple panel DMD™ HD2+ FTP DarkChip2(1280x720 pixel)

Color Filter Dichroic Filter (50mmx50)

Contrast ratio: 4300:1 (lens L2)

Projection lens: “zoom”, focus, zoom,and horizontal/vertical shift motorized

Lamp: 250W

Lamp life time: 1500 hours (average value measured in the laboratory under optimal conditions; it can be sensibly reduced by the unit misusing)

Type Lens	L1	L2	L3	L4	L5
Throw Ratio	1.2— 1.44	1.44—1.8	1.8—2.4	2.4—3.6	3.6— 5.6

Projection distance (between the screen and the center of the lens)										
Type Lens	L1		L2		L3		L4		L5	
Image width	Min	Max	Min	Max	Min	Max	Min	Max	Min	Max
1.3m (51”)	1.6	1.9	1.9	2.4	2.4	3.1	3.1	4.7	4.7	7.3
1.7m (69”)	2.1	2.5	2.5	3.1	3.1	4.2	4.2	6.3	6.3	9.8
2.2m (86”)	2.6	3.1	3.1	3.9	3.9	5.2	5.2	7.8	7.8	12.2
3.3m (130”)	4.0	4.8	4.8	6.0	6.0	8.0	8.0	12.0	12.0	18.5
4.4m (175”m)	5.3	6.4	6.4	8.0	8.0	10.6	10.6	15.9	15.9	24.8
5.5m (220”m)	6.7	8.0	8.0	10.0	10.0	13.3	13.3	20.0	20.0	31.0
6.6m (260”)			9.5	-	11.9	15.9	15.9	23.8	23.3	37.1
7.8m (300”)					14.0	18.6	18.6	27.9	27.9	-

Incomplete image along borders (vertical and horizontal)

- Compare compatibility of video/graphic signals and technical specifications of your projector.
- Press A on your remote control or AUTO on keypad to execute automatic adjustments.
- Adjust the horizontal and vertical position of projected image by selecting POSITION on the IMAGE ADJUSTMENTS menu.
- Adjust the width and height of image, selecting ASPECT in the IMAGE ADJUSTMENTS menu.
- Adjust the Overscan value in the IMAGE/OVERSCAN menu.

Image too dark, too pale or unnaturally coloured

- Verify compatibility of video/graphic signals with technical specifications of your projector.
- Go to PICTURE menu, select and regulate any of the following, accordingly: CONTRAST, BRIGHTNESS, COLOR, and TINT.
- If necessary, reset the COLOR TEMPERATURE and GAMMA CORRECTION (found on the IMAGE ADJUSTMENTS / ADVANCED SETTINGS menu).

Graphic image with poor quality vertical detail

- Verify compatibility of video/graphic signals with technical specifications of your projector.
- Press A on your remote control or AUTO on keypad to execute automatic adjustments.
- Adjust FREQUENCY and PHASE parameters, found in the IMAGE ADJUSTMENTS menu, to optimise vertical detail of the projected image.

Video Image showing colour misalignment on vertical details

- Verify compatibility of video/graphic signals with technical specifications of your projector.
- Adjust Y/C DELAY settings in the IMAGE ADJUSTMENTS / ADVANCED SETTINGS to reduce colour misalignment. For best results use an external colour bar test pattern source.

Remote control does not work

- Check the batteries and for correct polarity.
- Ensure that the area between the infrared sensor (front of projector) and the remote control is free of obstruction.
- Ensure that infrared sensors (front and rear of projector) are not exposed to intense light levels.

11 OPTIONAL ACCESSORIES

You can purchase the following optional accessories at your Dealer:

- Ceiling Bracket Kit.
- Type of lens

Up to six types of lenses are available to accommodate different throw distances and your specific installations. See *ADDITIONAL INFORMATION* for more details on throw distances and the dimensions of the image projected. To change the lens, contact always your nearest dealer.

Use only original, or SIM2 Multimedia approved, accessories.

CAUTION: for ceiling installation, by means of suspension bracket, carefully follow the instructions and safety instructions recommended by the Manufacturer in the bracket's literature.

9 CLEANING AND MAINTENANCE

The Projector and DigiOptic™ Image Processor do not require internal cleaning. There are no user serviceable parts inside the projector. Please refer all service requirements to qualified personnel.

Cleaning the projector's cover:
Use a soft slightly damp cloth. Do not use abrasive cleaners, solvents or other harsh chemicals, as this will damage the finish of the cover. Avoid direct cleaning of the rear panel's screen-printing.

Cleaning the lens:
The lens may be cleaned with a very soft, non-abrasive small brush, in order to remove dust particles. Alternatively, use a soft dry cleaning cloth (of the type used for camera lens cleaning) to remove fingerprints and grease marks.

10 TROUBLESHOOTING GUIDE

No power (Green and red LED are OFF)

- Check the power switch at the rear: it must be in position **I**.
- Check if the power cable has been connected correctly to a working socket.
- Check the power socket fuse, at the rear of the projector.
- Replace the fuse on the mains socket with an identical type (T 5A H) *(Fig. 2)*.
- Should the problem persist, seek authorised technical assistance.

The lamp is not coming on

- Allow a few minutes pause between switching off and turning on again (from stand-by). This will allow the lamp to cool down sufficiently.
- If the lamp doesn't come on – even though the projector has had sufficient time to cool down – seek technical assistance from your nearest Dealer.

No image

- Check that the selected input is actually connected to a active video or graphic signal.
- Check that the above source actually works.
- Verify compatibility of video/graphic signals with the technical specifications of the projector.
- Check the integrity of cables used to connect various sources.
- Check the cooling air inlets or air outlets on the units are not obstructed and the room temperature is below 35°C (95°F).
- Make sure the correct power-up procedure has been followed.

Image is disturbed, unstable or noisy

- Verify compatibility of video/graphic signals with the technical specifications of the projector.
- Check the integrity of cables connecting projector to various sources.
- If the signal source is a terrestrial broadcast (via a VCR) check that the receiving channel has been correctly tuned in and that the aerial system is in good working order.
- Should the problem be present with a signal coming from a video-recorder, ensure that the videotape is an Original "first generation" copy and in good condition.
- Adjust the VCR's tracking control for optimum picture performance. Ensure the VCR mode is active in the Picture menu.

associated with the source and signal type, and will be automatically recalled every time that particular source and signal type combination is selected.

Save default settings
To restore the original values to a previously modified Memory, select the line corresponding to the Memory in question and open the pull-down menu (← key). Then select the line *Initial settings saved in Memory 1*. To confirm that the operation has been completed successfully, the message *Memory 1 initialised* is displayed at the bottom of the screen and the letter 'I' appears to the left of the name of the memory.

Rename a memory
It is possible to assign a name to each Memory. To assign a name (with a maximum length of 12 alphanumeric characters) to a Memory, select the option 'Rename' from the corresponding pull-down menu. Enter the text following the procedure indicated in paragraph *SOURCE LIST*.

Restore Current Settings
On entering the MEMORIES menu, a copy of the current settings is saved in a temporary menu (labelled with 0 - AUTO). Once one or more memories have been recalled, you can restore the settings that were effective at the moment the Memories menu was accessed by selecting 0 - AUTO. However, this operation must be completed before the MEMORIES menu page disappears (30 seconds after the last operation commanded from the remote control or the keypad). The next time it appears, the temporary memory will contain new information that takes into account any Memories selected the penultimate time the 'Memories' page was accessed.

Memory 0 (- AUTO) can be used even when you do not wish to enable the Memories management function for the signal currently in use. Once Memory 0 has been selected, when a source is chosen, the settings that were effective at the time the Memory was previously recalled will be automatically applied.

INFO

Displays the current status of the projector and information concerning the projected video/graphic signal.
This function is displayed on pressing ⓘ on the remote control (or, in the absence of the *On Screen Display*, the → key on the remote control).

QUICK MENUS

The quick menus provide access to the main adjustments that affect image quality, without calling the main On Screen menus.
BRIGHTNESS, CONTRAST, COLOUR, TINT, SHARPNESS and FILTER adjustments appear at the bottom of the screen one after the other when the ↑ and keys are pressed ↓.

MESSAGES

The following messages may appear during operation of the system:

No signal

The system does not recognise any signal applied to the selected input. In this case:
- Make sure the selected input is connected to a video or graphic signal and that that source is functioning correctly.
- Check the condition of the cables used to connect the system to the various sources.
- Make sure the video or graphic signals supplied by the source are compatible with the system's technical specifications and, in particular, with those of the selected input.

Out of Range

This message appears when either the resolution or the vertical/horizontal frequency of the input signal exceeds system specifications (e.g. a QXGA graphic signal) or when an input is supplied with an incompatible signal (after setting the components input to YCrCb 15kHz a progressive signal is connected).

Substitution lamp

If the lamp hours exceed the 90% of the life lamp, at every switching on , a brief message appears on the screen to remember the need of replacing it in a short time.
If the lamp life is greater than 100% the message above persists until the ESC key is pressed.

MEMORIES

The main parameters of the image may be saved in distinct groups of values (known as 'Memories'); these parameters can subsequently be applied all together by way of a single command.
There are 3 distinct Memories (Memory 1, Memory 2, Memory 3) for each of the 25 signal types managed:

1 VIDEO	
2 VIDEO	
3 S-VIDEO	
4 S-VIDEO	
5 COMP/RGB(YCrCb 15KHz)	5 COMP/RGB(RGB 15KHz)
5 COMP/RGB(YCrCb 32KHz)	5 COMP/RGB(RGB 32KHz)
6 COMP/RGB(YCrCb 15KHz)	6 COMP/RGB(RGB 15KHz)
6 COMP/RGB(YCrCb)	6 COMP/RGB(RGB)
7 COMP/RGB(YCrCb 15KHz)	7 COMP/RGB(RGB 15KHz)
7 COMP/RGB(YCrCb)	7 COMP/RGB(RGB)
8 COMP/RGB(YCrCb 15KHz)	8 COMP/RGB(RGB 15KHz)
8 COMP/RGB(YCrCb)	8 COMP/RGB(RGB)
9 GRAPHICS RGB	
10 GRAPHICS RGB	
11 DVI-D (RGB)	
11 DVI-D (YCrCb)	
12 HDMI	

making a total of 75 different available Memories.
The image parameters that can be saved/recalled by the Memories management system are the following:

Image
BRIGHTNESS
CONTRAST
COLOR
TINT
SHARPNESS
FILTER
SHARPNESS MODE
VIDEO TYPE
NOISE REDUCTION

Picture
ASPECT
COLOR TEMPERATURE
OVERSCAN
GAMMA

Setup
LAMP POWER

Some of these parameters may not be available for certain inputs or certain input signals, as indicated in Tables 4 and 5. The menu page for the Memories management functions is activated by pressing the ■ key on the remote control or the ← key on the keypad *(Fig.30).*

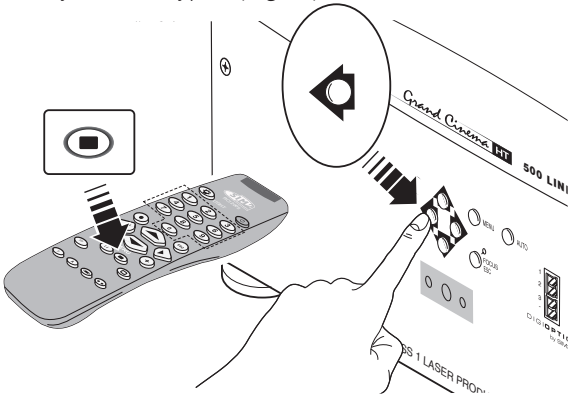

Fig.30

The operations that can be performed on each memory selected are described here below.

Save a memory

To save the current values of the image parameters in Memory 1, use the ↑ and ↓ keys to move to line '1' and then open the pull-down menu by pressing the ← key *(Fig.31)*. Then select the option 'Save current settings'. To confirm that the operation has been completed successfully, the message *Current settings saved in Memory 1* is displayed at the bottom of the screen and the letter 'S' appears to the left of the memory name. The same procedure is used to save parameters in Memories 2 and 3.

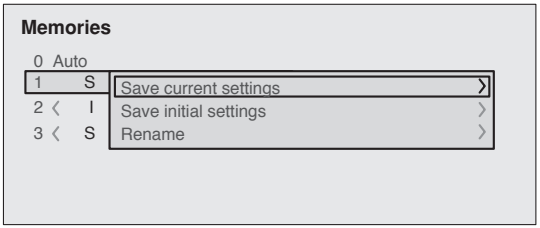

Fig.31

Recall a memory

To recall a Memory, select the desired line and press →. The parameters saved in the selected Memory will be applied to the image displayed and a message will appear to confirm the operation *Memory 1 recalled*. The Memory recalled will be

and F2 is made by the ← and → keys of the remote control; the function given to F1 and F2 is chosen with the ↓ and ↑ keys. The function delivered by the key is memorized by the intersection on the line and column.
In the following window are described the 6 options

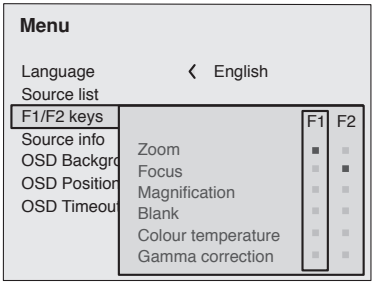

Fig.29

Zoom
Allows to access the optic zoom, where the ← and → keys allow to increase or decrease the size of the projected image.

Focus
Once selected, the ← and → keys allow to focus the image.

Magnification
Allows you to select the area to be viewed and then magnify the projected image. The degree of enlargement is selected in Zoom mode (identified by a magnifying glass in the centre of the image) using the ← and → keys. The area of the picture to be enlarged is selected in Pan mode (symbol in the centre of the picture) using the ←,→, ↓ and ↑ arrow keys. You can toggle between Zoom and Pan mode by pressing the F1/F2 key on the remote control.

Blank
Blanks the active video signal producing a completely black screen. Once pressed the key an indication of a few seconds on the OSD will confirm its activation. A click of any other key of the remote control allows to restore the previous settings.

Color temperature
The following click of the key (F1 or F2) allows to choose between the different values of the grid *(Fig. 22)*.
The l and l key allow to move along vertical lines , keeping the same color temperature but choosing different values from the black body curve. Using the ← and → keys , you can choose different color temperature values.

Gamma correction
The following click of the key (F1 or F2) allows to choose between the different gamma values available.
You can also use the ← or → keys to select the most appropriate curve.

SOURCE INFORMATION
When active (YES) each source change will show the information related to the signal. If not active (NO) there will be no information on the selected source.

OSD BACKGROUND
Determines the type of background for the On Screen Display.

OSD TIMEOUT
Use this adjustment to set the display time after which the On Screen Display will disappear.

OSD POSITION
Allows the On Screen Display to be positioned in a particular area of the projected image. The OSD can be positioned using the arrow keys for fine adjustments or keys 1...9 on the remote control to select one of 9 preset positions.

MENU

LANGUAGE

Lists the languages available for the *On Screen Display* menus.

SOURCE LIST

In order for the HT500E-LINK system to be more flexible, the following described functions allow to modify the input selection menu making it more user friendly.
The main window shows all the inputs available on the DigiOptic™ Image Processor. If one or more inputs are not utilized, it is often helpful to blank them from the input list (accessed with the 0 key).
Once the input has been chosen, in the drop menu that appears by pressing the ← key, it is possible to activate the source *(Fig. 27)*. The exclusion or activation of the source will automatically renumber the remaining active inputs.

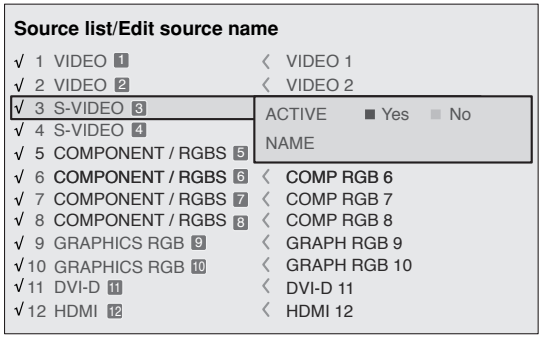

Fig.27

The inputs with an active video signal (visible in the input selection menu) are marked with a check symbol.
It can be also helpful to identify the input with a name chosen by the user (for example with the name of the connected source) rather than with the signal type.
Once chosen to have the input visible, in the drop menu, by selecting the Name option it is possible to rename the source in use.
This will make it easier to remember the source connected to a specific input. You can use up to 12 alphanumeric letters to name the source (for more details check the "Insert text" section)

Insert text

You will be able to insert text easily and rapidly by accessing the text insertion menu *(fig. 28)*

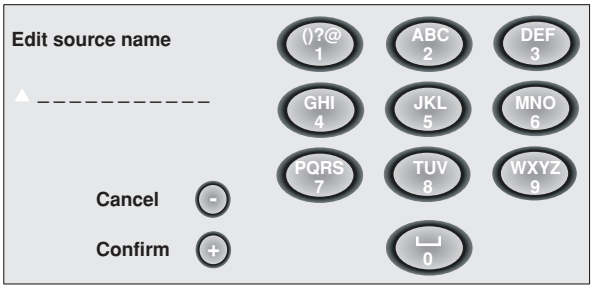

Fig.28

The text insertion mode remains the same if text is being inserted for the first time or if a previously inserted name is being edited. The letter insertion can be done in any available position (represented by horizontal lines).

Use the ← and → keys to move between letters either left or right respectively.
Press the numeric key matching the letter *(Fig. 28)*, the first click of the key selects the first letter, the second click the second letter and so on.
The available letters are shown in the text insertion menu.
Once one letter has been inserted, to insert the following one it is necessary to move with the cursor in the next right position with the → key of the remote control, repeat this procedure to insert other letters.
Use the ↑ key to switch from small case to capital letters and viceversa.
Any mistake can be deleted with the ↓ key once it has been positioned on the wrong letter.
Once the text insertion process is finished, it can be confirmed and saved by clicking the MENU+ key.
If you want to delete the modifications use the MENU- key of the remote control.

F1/F2 KEYS

This allows to assign different functions to the remote control keys, named F1 and F2.
The window is made of 6 options, once for each line and by two columns showing the F1-F2 keys. The choice between F1

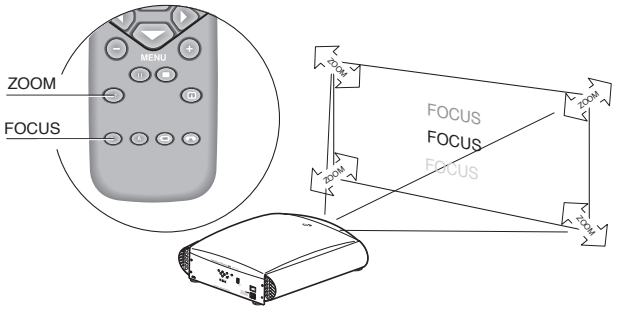

Fig. 26

In the initial phase of installation the configurable keys (F1, F2) serve as optical zoom and optical focus *(Fig.26).*

LAMP POWER

If your room is especially dark, the images from the system HT500E-LINK could result execessively bright. In order to enjoy wonderful images, the ECOMODE function activation allows to re du ce the power used to feed the lamp. In this way, the brightness of the image will be adapted to your projection conditions and a grater life lamp will be guaranteed.

POWER ON

If active (AUTO) allows to power up the system directly from the power feeder, once the initializing phase is completed.
If not active (STAND-BY) once the initializing phase is completed the system remains in a stand-by mode waiting to receive the power on command from the remote control or the key pad.

TEST PATTERNS

Displays a series of five test patterns, useful for the installation of the projector.
Press ↑ and ↓ keys to browse pattern.

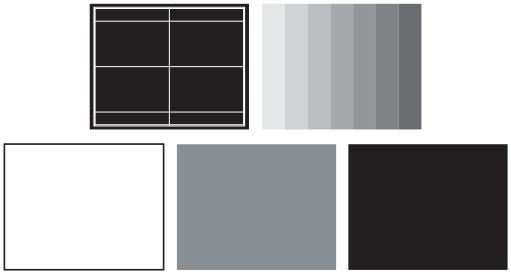

FACTORY DEFAULTS

Reconfigures the projector to original factory settings except Position, Orientation, Y/C Delay, Zoom and Focus.

SETUP

The setup menu contains less frequently used adjustments that may be required during installation (e.g. *On Screen Display* language selection or the display of Test Patterns).

ORIENTATION

Select the option that best describes the installation i.e. desktop front, ceiling front, desktop rear and ceiling rear.

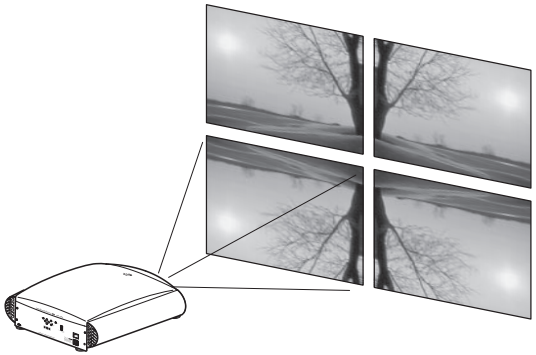

Fig. 23

HORIZONTAL/VERTICAL KEYSTONE

To obtain maximum quality of the projected image, we recommend the installation of the projector on a level platform parallel and central to the screen.
Adjust the feet underneath to obtain a level position, lining up the base of the projected image to the base of the projection screen *(Fig. 24)*.

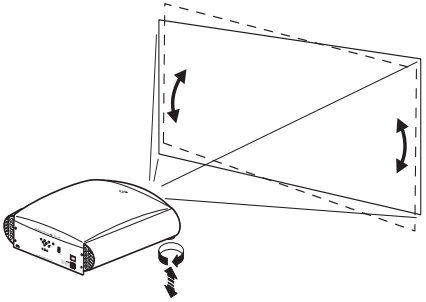

Fig. 24

If the projected images needs to be centred, the LENS SHIFT (see next paragraph) adjustment allows the projected image to be moved vertically and horizontally, in relation to the centre of the screen *(Fig. 25)*.

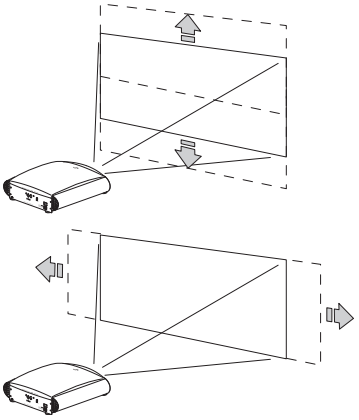

Fig. 25

In the event you are unable to centre the image within the screen area, tilt the projector until the image is correctly positioned.
Any keystone error can be removed by the Keystone adjustment in the Set up menu.
The keystone adjustement helps to compensate possible horizontal tilts of the projector.

LENS

The ZOOM adjustment impacts on the motorized zoom lens allowing to increase or decrease the dimension of the projected image. The FOCUS adjustment impacts on the motorized lens focus, allowing to obtain the highest definition on the projected image, an accurate focus setting should allow the viewer to distinguish each pixel that create the image one from another.
If the video signal used is not suitable for this purpose, the HT500E-LINK system provide two test pattern, each available with the ajustment mentioned above, in order to select the appropriate value for ZOOM and FOCUS.
This test pattern is displayed by pressing the • key, once the right adjustments are reached using the ← and → keys, the test image can be easly removed pressing again the • key of the remote control. The LENS SHIFT adjustment allows to move horizontally (keys ← and →) and vertically (keys ↑ and ↓) the lens, in order to center the image.

GAMMA CORRECTION

Determines the system's response to the grey scale, emphasising or attenuating the different grades of brightness (blacks, dark, medium, light grey, whites) in the projected image.
There are 9 types of gamma curves 01, 02, 03, 04, 05, 06, 07, 08 and USER. Whit USER curve the the user may select the exponent (gamma value) used for gamma compensation.
Values between 1.5 to 2.2 enhance the details in the dark image content, resulting in a lower contrast perception.
Values higher than 2.2 , occurs a fade away of details in the dark image content, resulting in a higher contrast perception.
With the value equal to 2.2 (the standard value) , the image's colours displayed are the most natural colours available with the common video sources.

OVERSCAN

Remove noise around image. Some sources can produce a picture with noise along edges, thanks to the overscan function it is possible to drop such imperfections outside the projected area. The overscan value can be included between 0 (no overscan) and 32 (maximum value). The image maintains in any case the aspect.

POSITION

Use this adjustment to position the image vertically and horizontally. Determines the aspect ratio of the projected image. These parameters do not normally require adjustment because the system checks the input signal and automatically sets the most suitable values.
However, if the image is not perfectly centralised it may prove useful to request the system to repeat the input signal analysis and image positioning, calling the automatic control procedure from the AUTO button on the remote control or keypad. When this procedure is called it is helpful to have a white or light coloured background on the screen in the current picture.

FREQUENCY/PHASE

These adjustments, available for progressive signals and for signals from PC, ensure correspondence between the number of pixels making up the signal and the number of pixels making up the projected image.
These parameters do not normally require adjustment because the system checks the input signal and automatically sets the most suitable values.
However, if the image appears disturbed (loss of position within the equidistant vertical bands or instability and lack of sharpness on the narrow vertical lines) it may help to prompt the system to repeat the input signal analysis and determination of the best parameters by calling the automatic adjustment procedure with the AUTO key on the remote control or on the keypad.
If the automatic procedure fails to have the required effect, enter the frequency and phase values manually and approach the screen sufficiently to observe the effects of the adjustments.

Y / C DELAY

In the case of Video and S-Video signals, it may be necessary to correct horizontal colour misalignment within the projected image. For a given video standard (e.g. PAL or NTSC) the stored value does not normally require further fine-tuning, unless the source or connection cable has changed.

Table 5

Adjustments	Inputs					
	Video S-Video	RGBS 15kHz YCrCb 15kHz	RGBS	YCrCb	RGB Grafico	DVI-D HDMI™
Position	•	•	•	•	•	-
Aspect	•	•	•	•	•	•
Frequency	-	-	•	•	•	-
Phase	-	-	•	•	•	-
Colour Temperature	•	•	•	•	•	•
Gamma Correction	•	•	•	•	•	•
Overscan	•	•	•	•	•	•
Y/C Delay	•	•	-	-	-	-

IMAGE

This menu features adjustments relating to picture position, aspect ratio, etc.

ASPECT

This adjustment allows you to change the dimensions and aspect ratio (relationship between width and height) of the displayed image. There are five preset aspects available and three personalised aspects (with user-settable parameters). You can select a different aspect for each source: the selected aspect ratio will be automatically called the next time the relative source is called.
You can also select the required aspect ratio by repeatedly pressing the ◀▬▶ key, or by pressing ◀▬▶ and a numerical key (1...8).
The following aspects are available.

NORMAL: projects the image occupying the full height of the screen while maintaining the aspect ratio of the input signal. When the input signal aspect ratio is 4:3 black vertical bands are displayed on the right and left of the picture.

ANAMORPHIC: allows a 16:9 picture to be displayed correctly.

LETTERBOX: serves to display 4:3 letterbox image (with source signal having black bands above and below the picture) so that it fills the 16:9 screen and maintains the correct aspect ratio.

PANORAMIC: this aspect stretches the 4:3 image, slightly cropping the upper and lower parts.
Panoramic is ideal for displaying a 4:3 image on the 16:9 screen of the Display.

PIXEL TO PIXEL: this aspect displays the image as it is input without adapting it to the screen.
The image is projected in the centre of the screen and if its horizontal and/or vertical dimensions are smaller than the display, it is bounded by vertical and/or horizontal black bands.

USER 1, 2, 3: When none of the preset formulas are suitable, the User formulas are available, with the facility for continuous horizontal and vertical adjustment of picture size.

SCREEN CONTROL
If an appropriate screen-masking interface is connected to the 12V output socket it is possible, for each aspect chosen, to reframe the screen to a variety of aspect ratios and screen sizes (please refer to the screen manufacturer's manual).

COLOR TEMPERATURE

Changes the colour balance of the image.
The color temperature adjustment is made by positioning the white point inside CIE cromaticity diagram.
The systems allows to choose the white point among 36 values inside the neutral color area *(Fig. 21)*.

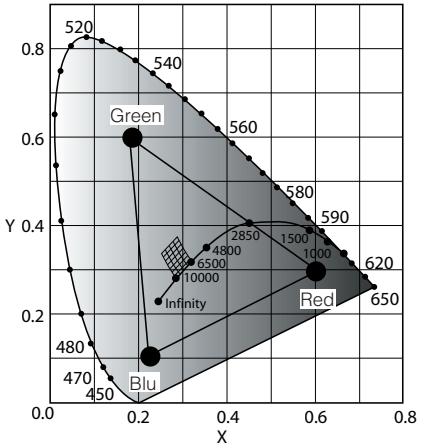

Fig. 21

The correlated color temperature varies moving along horizontal lines, low temperatures are present in the right side (where the red component is increased), in the left side of the diagram you can find high temperature values (in which blue component is higher).
The points along the lower horiziontal line represent colors that belong to the black body curve *(Fig. 22)*.
Along vertical lines the color temperature is constant but is different from black body curve, which mean if you select point from the high part of the diagram you increase the green componet, while low part of diagram cause an increase of purple component.

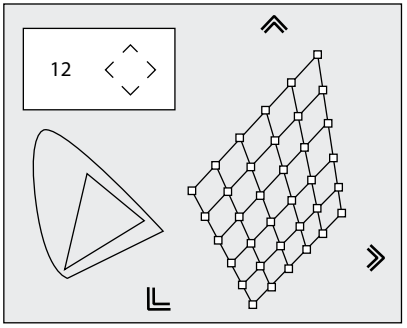

Fig. 22

COLOR
This control (also called Saturation) increases or decreases the picture colour intensity. When set to zero, colour images will be shown in black and white. Increasing the value, try to find the point at which the colours look natural: suitable references include skin tones and grass in landscape shots.

TINT
Controls the purity of the colours. Basically determines the red-green ratio of the picture.
Reducing the value will boost the red contents of the picture, increasing the value will boost the green tones. For this adjustment use skin tones or a test pattern image with colour bars as a reference.

SHARPNESS
Use this adjustment to increase and decrease the level of picture detail.
When the sharpness value is reduced the image details appear less pronounced, while increasing the value raises image definition, making the outline of objects sharper.
Note that an excessively high value may result in a 'noisy' picture and the edges of objects may be unnaturally defined.

SHARPNESS MODE
This allows you to select the type of processing associated with sharpness adjustment. In the case of a progressive or interlaced video signal VIDEO mode is advisable; with PC graphic signals use GRAPHIC MODE.

FILTER
This allows you to select the mode in which the input signal is processed. Selecting the most appropriate value for a given input signal ensures the best horizontal and vertical definition and makes the picture sharper.

CINEMA MODE
In AUTO the deinterlacer recognises if the video signal source is a movie film (obtained from a Telecine device with 3:2 or 2:2 pull-down) and applies a deinterlace algorithm optimised for this type of signal.
If the video signal source is not identified as a film, or if you select NO the deinterlacer applies a Motion compensated algorithm optimised for video camera signals.

VIDEO TYPE
Activates a filter to improve stability of pictures from video recorders or DVD players. To toggle between NORMAL, VCR1 mode and VCR2 mode press ⊂⊃ on the remote control.

NOISE REDUCTION
This adjustments allows to choose the filter value for noise reduction purposes.
As soon as this option is selected on the menu, the image is divided in two parts.
In the left side the image is not altered by the filter, in the right part the filter is activated.
This allows you to compare the effect of the filter.
It is possible to deactivated the filter (NOT ACTIVE), to use the automatic adjustments (AUTO) or to manually select (MANUAL) the value suitable for the image with the VALUE adjustment.
In case of using the VALUE adjustement, it is enoght to select to cursor below and set the value with the ← / → keys of the remote control.
Associated to the NOISE REDUCTION there is the possibility to use the specific function (FLESH TONE CORRECTION) to make skin tone more natural. Often the use of noise reduction filter slightly degrades the image in those areas where skin tones are visible. With the use of this function it is possible to maintain an excellent image quality throughout the entire projected image.

Table 4

Adjustments	Inputs					
	Video S-Video	RGBS 15kHz YCrCb 15kHz	RGBS	YCrCb	RGB Grafico	DVI-D HDMI™
Brightness	●	●	●	●	●	●
Contrast	●	●	●	●	●	●
Colour	●	●	-	●	-	-
Tint	o	●	-	●	-	-
Sharpness	●	●	●	●	●	●
Sharpness Mode	-	-	●	●	●	●
Filter	●	●	-	-	-	-
Cinema Mode	●	●	-	-	-	-
Video Type	●	●	-	-	-	-
Noise reduction	●	●	-	-	-	-
Flesh tone correction	●	●	-	-	-	-

o Present only if the Video Standard is NTSC

MAIN MENU

To access the main menu of the On Screen Display press the MENU key on the keypad or the MENU+ or MENU- key on the remote control.
The main menu is divided into four windows, PICTURE, IMAGE, SETUP and MENU, in which the various adjustments are grouped according to the frequency of use. Use ↑ and ↓ to select the line corresponding to the adjustment you wish to make *(Fig. 19)*.

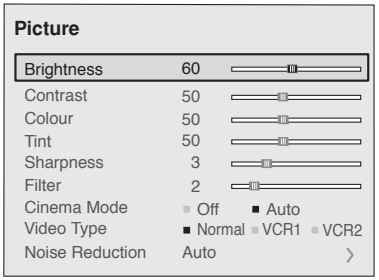

Fig. 19

The various menus only offer the relevant adjustments in accordance with the type of input signal displayed (e.g. certain typical adjustments for video signals, not necessary for graphic signals, do not appear on the menus, and vice versa).
Some adjustments (e.g. BRIGHTNESS and CONTRAST) are associated with a numerical value that can be varied within the set limits using the keys ← / →. For others (e.g. VIDEO TYPE) you can choose among three options presented on the same ← / →).
Other adjustments (marked by the < symbol) provide submenus, which appear as a superimposed window in which the selection is made with the ↑ and ↓ keys *(Fig. 20)*.

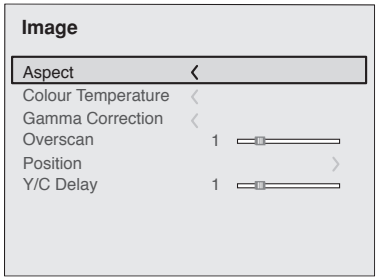

Fig. 20a

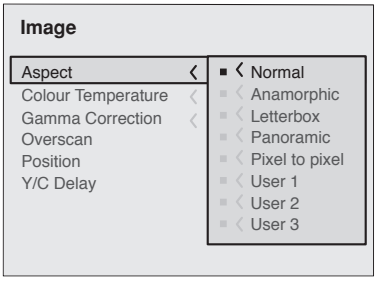

Fig. 20b

These submenus are accessed by pressing the < key, while exit and return to the upper level occurs by pressing MENU+/-.
Press ESC on the remote control or keypad to interrupt the menu display or wait for it to disappear automatically after the number of seconds set on the SETUP page.

PICTURE

This menu features the adjustments related to picture quality. Adjustments that are not available for a given input do not appear on the menu. *Table 4* summarises the adjustments available for each input. For a complete overview of the on-screen menus, consult the *ON SCREEN MENU LAYOUT* in the *ADDITIONAL INFORMATION* section.

BRIGHTNESS

Use this control to adjust the image's black level without affecting white areas. Increasing the value will give more detail in darker parts of the picture. For correct adjustment it may prove useful to display the signal relative to the grey scale within which the black level and the level immediately above it must be separately identifiable. Alternatively use a scene composed of black objects alongside other dark coloured objects.

CONTRAST

Use this control to adjust the image's black level without affecting white areas.
To ensure correct adjustment, it may prove useful to display the signal relative to the grey scale, within which the white level and the level immediately below it must be separately identifiable. Alternatively use a scene composed of well-lit white objects surrounded by light coloured objects with lower level lighting.

8 ON SCREEN MENU

All system functions can be activated from the keypad or remote control with the aid of a practical and comprehensive system of on screen menus.

INPUTS

The input selection menu (Inputs) is called by pressing 0 on the remote control and, when no other menu is displayed, using the ↑ and ↓ keys on the keypad. To select an input, scroll the list with the ↑ and ↓ keys until the desired input is highlighted, then press →.
Display of the input selection menu is terminated by pressing the ESC key, or when the time allowed for displaying the on-screen menu has lapsed (set in the Set-up Menu).
Input 5 can accept RGB and YCrCb signals with a scan frequency up to 32Khz.
Inputs 6, 7 and 8 can receive RGB and YCrCb signals, at 15 kHz, 32 kHz or higher. The association between the input and the type of signal (RGB or YCrCb) is made from the pull-down menu that appears on the right of the < symbol after pressing the ← key *(Fig. 18b)*.

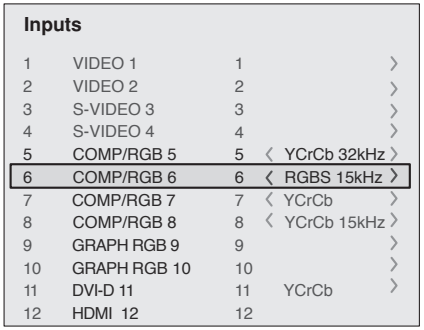

Fig. 18a

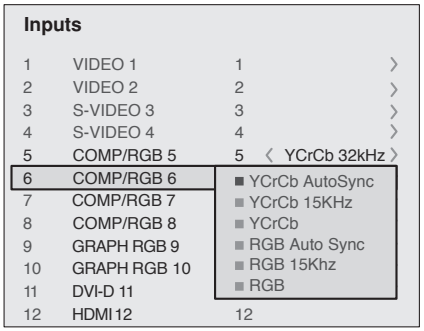

Fig. 18b

In the pull-down menu it is also possible to choose the horizontal frequency or use the AutoSync feature; in this case the system detect the horizontal frequency signal (15KHz, 32KHz or higher) automatically.
Input 11 is capable of receiving YCrCb or RGB signals coming from DVI-D sources.
The selection should be made from the drop menu following the indications described above.

After selecting the source signal (by means of the ↑ and ↓ keys), press MENU+/MENU- to confirm and close the pull-down menu; the value you have just set will be displayed on the right of the < symbol.
As with the other inputs, you can now select the input just set by pressing the → key.
During the short time it takes to find the signal, a box appears showing the signal requested. As soon as the signal is shown in the box additional information is displayed concerning the video standard (for video signals) or resolution (for graphic signals), and format.
Fom the SETUP menu it is possible to choose to visualize or not this information, for more details check the *SOURCE INFORMATION* in MENU section.

6 KEYBOARD PAD

Eight push buttons, at the rear of the projector, will allow complete operation without the use of the remote control.

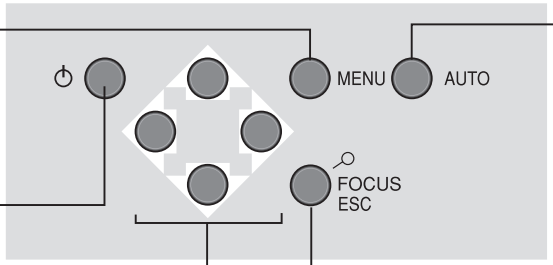

Menu

Activates the *On Screen Display* menus. Navigates Menu pages.

Auto

Selects AUTO Adjust (automatic optimisation of the displayed image).

Switches off to stand-by.

Up/Down/Left/Right arrow keys

Navigate through and make adjustments to the *On Screen Display* menus.
Arrow Up/Down switch on from stand-by and recall Source Selection menu.

-Focus-Esc

De-activates the *On Screen Display* and gives access to the lens ZOOM/FOCUS adjustment functions.

7 REMOTE CONTROL

The remote control transmits commands to the system by infrared signals.
There are three infrared sensors, one at the front of the Projector, one at the rear of the Projector and one on the front panel of the DigiOptic™ Image Processor.
It is possible to control the projector by pointing the remote control at the screen; the sensor at the front of the projector will pick up the reflected infrared commands. *(Fig. 16)*.
Avoid placing obstructions between the remote control and the infrared sensor at the front of the projector; this will impair the remote control performance.

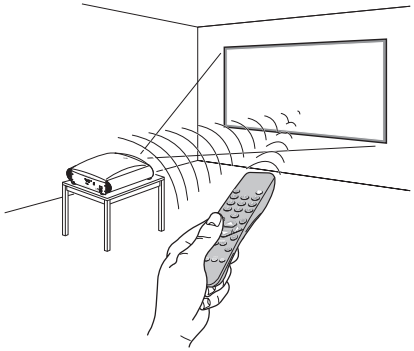

Fig. 16

Insert the batteries, taking care to match the polarity, as indicated in the battery recess of the remote *(Fig. 17)*.
Change the batteries in the remote control if experiencing difficulty in sending commands to the projector.
If the remote control is not to be used for a long period of time remove the batteries. Replace all batteries at the same time; do not replace one new battery with a used battery. If the batteries have leaked, carefully wipe the case clean and replace with new batteries.

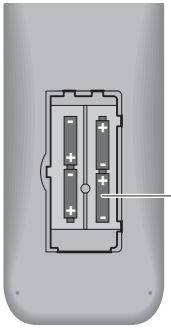

Four 1.5V AAA type batteries

Fig. 17

SWITCHING ON FROM STAND-BY

Switching on the system *(Fig.14)*:
- from the remote control (keys 0-9)
- from the Projector keypad (keys ↑ and ↓).

Typically, the picture will appear after 15-20 seconds. Pressing a key from 1-9 on the remote control selects the corresponding input; pressing 0 selects the input active at the time the system was last switched off.
If the system is switched on very soon after it was last switched off, the lamp may fail to come on because it is too hot. In this case just wait a few minutes to allow the lamp to cool.

Switching the system off *(Fig.15)*:
- from the remote control (⏻ key)
- from the Projector keypad (⏻ key).

If you wish to power off the system completely, wait at least one minute in stand-by before setting the mains power switches on the units to the "O" position or disconnecting the power supply cables. This is to allow the fans in the Projector unit sufficient time to cool the lamp.

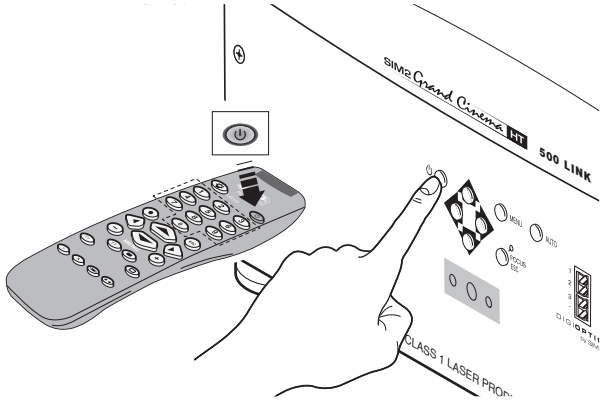

Fig.15

In case the Projector unit is shut down (for example due to a shut down of the projector unit by putting the switch in the "O" position or by accidentally unplugging the power cord cable) to re-boost the HT500E-LINK system it is necessary to shut down the DigiOptic™ Image Processor and repeat the power-on procedure described in point 1, 2, 3 and 4.

In case the connection with the fiber optics between the two unit is interrupted (for example by unplagging one or more cable), to restore the system, it is necessary to turn off the two units through the main switches and once the connecectin is restored, repeat steps 1, 2, 3 and 4 of the power-on procedure.

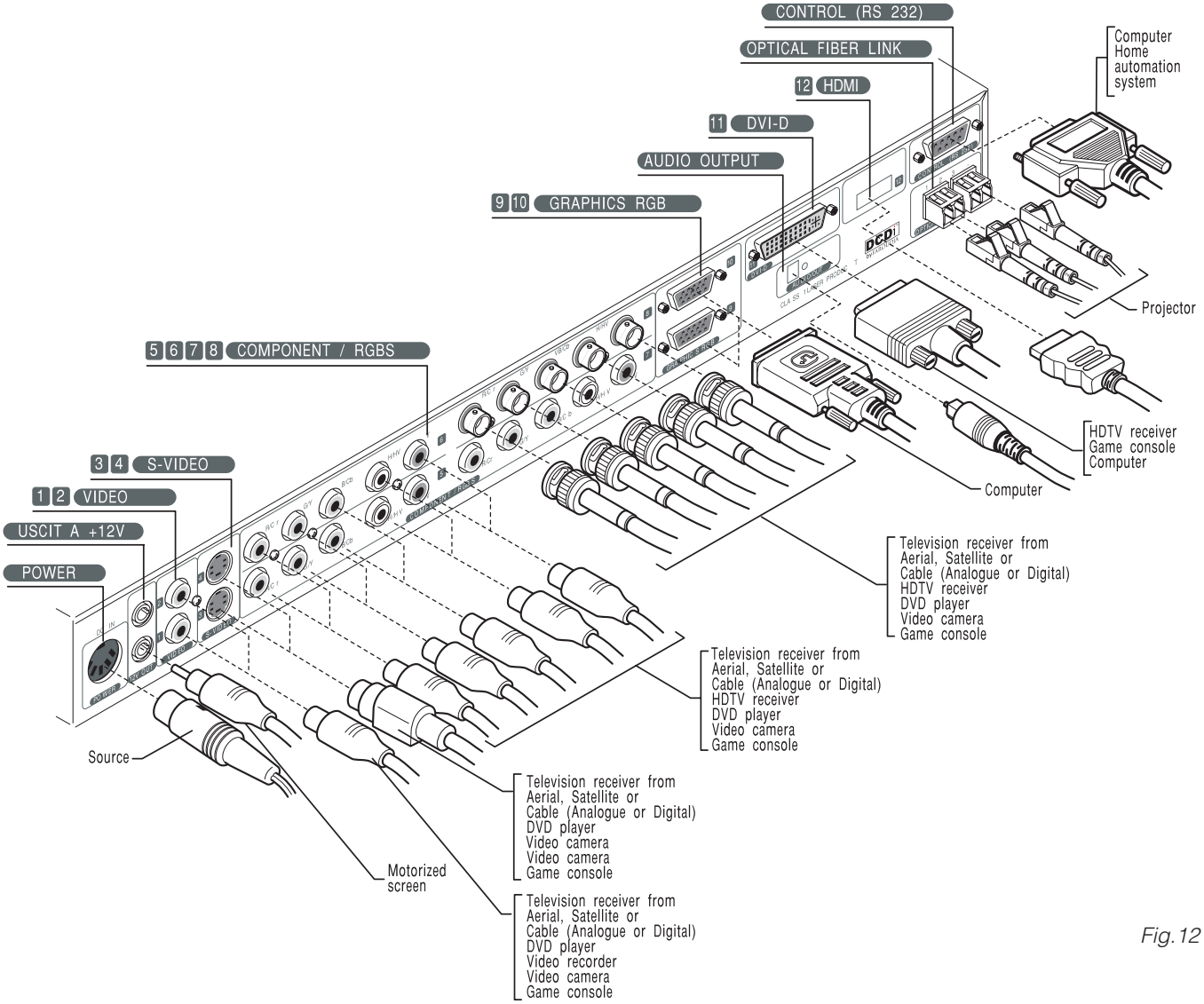
CONTROL (RS 232)
OPTICAL FIBER LINK
12 HDMI
11 DVI-D
AUDIO OUTPUT
9 10 GRAPHICS RGB
5 6 7 8 COMPONENT / RGBS
3 4 S-VIDEO
1 2 VIDEO
USCIT A +12V
POWER
Computer
Home
automation
system
Projector
HDTV receiver
Game console
Computer
Computer
Television receiver from
Aerial, Satellite or
Cable (Analogue or Digital)
HDTV receiver
DVD player
Video camera
Game console
Television receiver from
Aerial, Satellite or
Cable (Analogue or Digital)
HDTV receiver
DVD player
Video camera
Game console
Source
Television receiver from
Aerial, Satellite or
Cable (Analogue or Digital)
DVD player
Video camera
Video camera
Game console
Motorized
screen
Television receiver from
Aerial, Satellite or
Cable (Analogue or Digital)
DVD player
Video recorder
Video camera
Game console

Fig. 12

5 SWITCHING ON AND OFF

The HT500E-LINK system consists of the Projector and the DigiOptic™ Image Processor (which is also the system control centre). The DigiOptic™ Image Processor sends commands to the Projector and receives operating status information from the Projector and function commands from the user. The system can be controlled from either the remote control (via the infrared sensors on the DigiOptic™ Image Processor and on the Projector) or the keypad located on the rear of the Projector.
The two units have separate power supplies however: after connecting the unit to the electrical mains supply:

1) **Set the projector power switch on the rear panel to "I" (start-up) (Fig.13 phase A).**

2) **Set the DigiOptic™ Image Processor power switch on the external power supply unit to "I" (ON) (Fig. 13 phase B). In this phase make sure the DigiOptic Image Processor ON/OFF button (Fig. 13 phase C) is in the OFF position: in this condition the indicator LEDS on the front panel of the DigiOptical Image Processor should not be lit.**

   The power-up sequence described at points 1, 2, 3 and 4 must be observed in full; otherwise the system will not initialise properly and the power-up sequence must be repeated following the proper procedure.

3) **Turn on the DigiOptic™ Image Processor by pressing the button on the front panel (Fig. 13 step C).**
   After a few seconds (system initialisation interval), the DigiOptic™ Image Processor and the Projector assume stand-by mode.
   System status information is provided by two LEDs (green and blue) on the front panel of the DigiOptic™ Image Processor, a blue and green LEDs on the rear of the Projector.
   Significant status signals are given in Table 3.

   If the No optical link or Error signals are active the system cannot be operated; if the Warning signal is active the system will operate but it may be unable to read certain input signals correctly.

4) **Switching on the system (Fig.14):**
   - **from the remote control (keys 0-9)**
   - **from the Projector keypad (keys ↑ and ↓).**

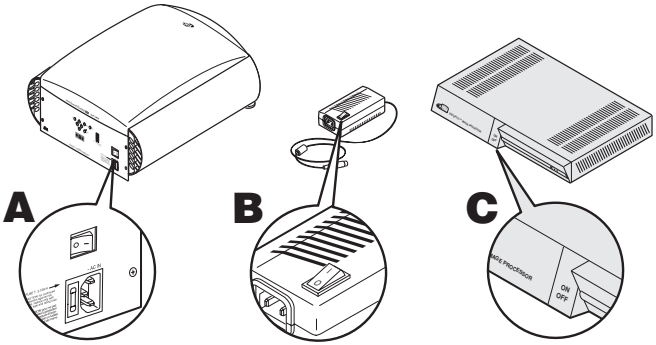

Fig. 13

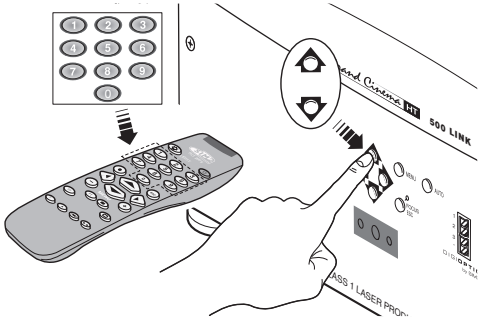

Fig. 14

Table 3

Status	DigiOptic™ Image Processor		Projector	
	Green LED	Blue LED	Green LED	Blue LED
Off	○	○	○	○
Initialisation	●	●	○	○
Stand-by	○	●	○	●
On	●	○	●	○
Cooling	☼	☼	○	●
Optical link not active	●	☼	●	●
Caution	☼	○	-	-
Error	○	☼	-	-

○ : Off ● : On ☼ : Flashing - : Insignificant

DVI-D 11

This input allows you to advantage from the quality of the digital images .

If your source is equipped with a DVI-D output, YCrCb or RGB connect it to this input to exploit the quality of the HT500E-LINK system.

HDMI 12

With this input it is possible to integrate the optimal quality of a digital image with a multichannel audio signal.
The HDMI™ (High Definition Multimedia Interface) in fact integrates a multichannel audio signal with the uncompressed high definition video signal.
The interface also allows the exchange between the video source and the HT500E-LINK system of control data to optimise the quality of the projected image.

The HDMI™ input allows connection to video sources that use the HDCP (High-Bandwidth Digital Content Protection) protocol to protect their contents. This protocol is in fact incorporated in the definition of the HDMI™ technology.
Once the video source has been connected to the HDMI™ input, internal processing by the DigiOptic™ Image Processor separates the video information from the audio information. This information is then made available via an optical digital output with a female TOSLINK connector in accordance with the S/PDIF standard.

CONTROL (RS232)

The system can be controlled via a personal computer or home automation systems by means of the serial port: simply connect this input via a serial cable from an RS232 serial port. On request, SIM2 will send you a document containing the serial port settings and the list of main commands.

Table 1

DigiOptic™ Image Processor Connector	Video signal source connector		
Y (green)	Y	Y	Y
Cr (red)	P_R	R-Y	V
Cb (blue)	P_B	B-Y	U

VIDEO 1 2

These inputs should be connected to a Composite Video signal (CVBS) by means of a cable with an RCA connector.
The connector on the source is usually yellow and is frequently labelled VIDEO.
Although other types of signals are preferable (since they allow better picture quality), this is still the most common type of output, and nearly all television receivers, video-recorders, DVD players, video cameras, etc., are equipped with CVBS outputs.

S-VIDEO 3 4

These inputs should be connected to an S-Video signal by means of a cable with a 4-pin mini-DIN type connector.
The corresponding output on the source can be identified by the wording S-VIDEO or Y/C.
Almost as widespread as Composite Video, S-VIDEO is preferable because it offers a clearer and sharper picture.

COMPONENT / RGBS 5 6 7 8

These inputs are composed of three sets of 5 RCA connectors (5,6,7) and a set of 5 BNC connectors (8).
Each set of connectors is suitable for RGB and Component signals.
RGB signals can have the following synchronisations: composite sync on the green signal (RGsB), H+V Composite Sync, or separate H/V Sync.
Connect the R, G, B outputs of the source to the respective R, G, B inputs of the DigiOptic™ Image Processor (paying attention not to invert the positions) and any synchronisation signals to the HV input or the H and V inputs. When connecting the three sets of RCA connectors use the colours as a guide: connector R is red, G is green, B is blue, H/HV is white and V is black.
By using a suitable SCART to RCA (or BNC) connector adapter cable, an RGB video signal from a source equipped with an SCART connector can be connected to this input.
Component signals are connected to inputs Y, Cr and Cb, taking care to observe the correspondence with the outputs on the source. Since the latter can be labelled in various ways, refer to *Table 1* to establish the correspondence between the various signals. The connector colours can also be of help, as shown in the table. Input 5 is dedicated for RGB and YCrCb signals up to 32 KHz only. In fact, in order to guarantee a high image quality, even with not so accurate sources, the input signal is elaborated by specific circuit boards in the DigiOptic™ Image Processor.The video signal suitable for inputs 6-7-8 can have a scan frequency of 15KHz (standard video resolution) or 32KHz or more (progressive scan video, high definition video).
Some sources provide the facility to choose between a progressive signal or an interlaced signal. Although in general a progressive signal is higher quality than an interlaced signal, it is often preferable to perform the deinterlacing operation on the HT500E-LINK system rather than on the source because the HT500E-LINK system is equipped with Faroudja's sophisticated directional correlation deinterlacing technology (DCDi™).
Progressive signals usually provide better quality than interlaced signals, but if the source features both progressive and deinterlaced signal outputs it is good practice to compare the quality of the pictures reproduced by the HT500E-LINK system in the two cases: deinterlacing performed by the HT500E-LINK system (thanks to Faroudja DCDi™ technology) is often more effective than that performed at the source (typically a DVD player)

GRAPHICS RGB 9 10

This input should be connected to an RGB-type video or graphic signal using a cable with a DB15HD type connector.
The signal source device (typically a personal computer or game console) must be able to provide separate H/V synchronisation or composite H+V.
The video or graphic signals that can be connected to this input can have horizontal scan frequencies (H-sync) of between 32 and 80 kHz and a vertical frequency (V-sync) of between 48 and 100 Hz. Image resolution can vary between 640x480 and 1600x1200 pixels (VGA, SVGA, XGA, SXGA, UXGA).

To activate an electric motorised screen a 12 Volt output is provided at the rear of the DigiOptic™ Image Processor. This can be connected to a screen interface unit, which can be supplied by screen manufacturers *(Fig.10)*.

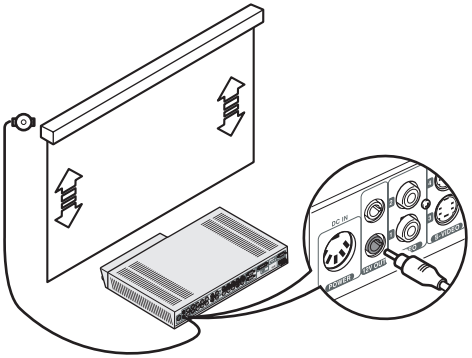

Fig.10

The output is activated (Voltage: 12 Vdc) when the Projector is switched on and is de-activated (no Voltage output) when the projector is in stand-by mode.
Some manufacturers offer screen-masking systems to help frame the projected image and improve picture contrast.
These systems can be connected to output, at the rear of the DigiOptic™ Image Processor *(Fig.11)*.

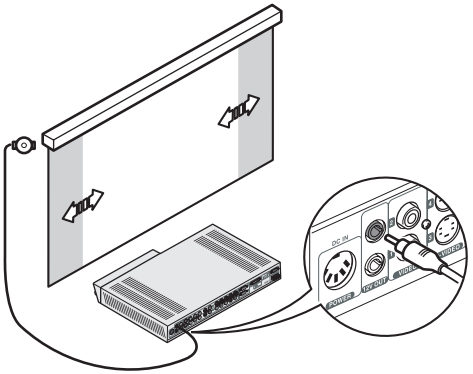

Fig.11

For rear projection the screen must be translucent. For front projection, we recommend the use of screens with low gain specifications (i.e. 1.3 to 2). The use of high gain screens should be avoided due to their limited viewing angle, which is undesirable for a large audience. Preferably, use a screen with black, non-reflecting borders, which will perfectly frame the projected image.
Avoid light shining directly on the screen during projection as this will reduce contrast and black level detail on the projected image. For the true cinema experience best results are achieved with little or no ambient light.

Furniture and other objects with reflecting surfaces, as well as light coloured walls should be avoided, as they are likely to interfere with the screen's characteristics.

CONNECTING THE VIDEO SOURCES

Connect the cables from the video sources, the serial cable from the external control unit and the optical fibre cables for connection to the Projector, to the rear panel of the DigiOptic™ Image Processor.

To obtain the best performance from the HT500E-LINK system, connect the various signal sources using good quality cables designed for video applications (rated impedance 75 Ω).
Ensure that:

- the cables are routed in such a way that they do not present an obstruction to people moving around the room;
- the connectors are inserted carefully to avoid damaging the pins;
- the cables are not twisted or crushed;
- when disconnecting the cables the connectors are not violently pulled out of the sockets on the various units.

Video sources (television receivers, VCRs, DVD players, etc.) often feature several outputs. To obtain the best performance from your system, carefully choose which output to use. Generally, the type of signal offering the best picture quality is DVI-D, followed by RGB, Components, S-Video and Composite Video, in that order.
However, the HT500E-LINK system is equipped with an excellent Video Decoder and Deinterlacer and therefore even inferior quality signals will produce high quality results.
Table 1 shows the types of signals usually available for the most common types of video sources and the corresponding input connectors to use on the DigiOptic™ Image Processor).

CONNECTING THE TWO UNITS

The system can be fully controlled using the supplied IR (infrared) remote control handset. There is a single remote control for both the DigiOptic™ Image Processor and the Projector; the remote control can be directed towards either unit since they are both equipped with an IR sensor.

The connection between the two units is made with a single cable containing three fibre optic cables each terminating in an LC connector. The standard cable length of 20m will be sufficient for most installation requirements.
During installation of the fibre optic cable:

- The individual optical cables are delicate: always handle the main cable without touching the individual optical cables *(Fig. 7)*.
  Never pull the individual optical cables or connectors; if necessary, you may pull the main three-core cable.

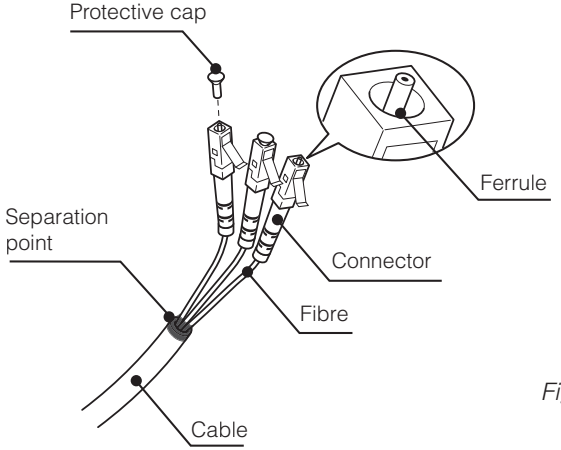

Fig.7

- Only remove the cap protecting the connector ferrule immediately before inserting the connector; if the ferrule is allowed to come into contact with foreign material it may be damaged, making the connector unusable.
- Take particular care when inserting fibre optic connectors in their respective sockets on the rear panel of the DigiOptic™ Image Processor and the rear panel of the Projector.
- Make sure that the single optical cables are not switched: the numbers on the cables must match the numbers on the connectors *(Fig.8-9)*.
- Check that the connectors are correctly inserted.
- Make sure that the cable does not constitute an obstacle for persons moving around the room.
- Take care not to create knots in the cable; the minimum radius of bends in the cable is 2 cm.
- Prevent the cable from pulling and mechanical stress: this could cause the connectors to be pulled out and damaged.

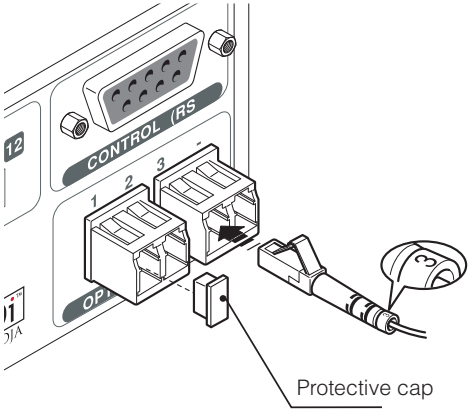

Fig.8

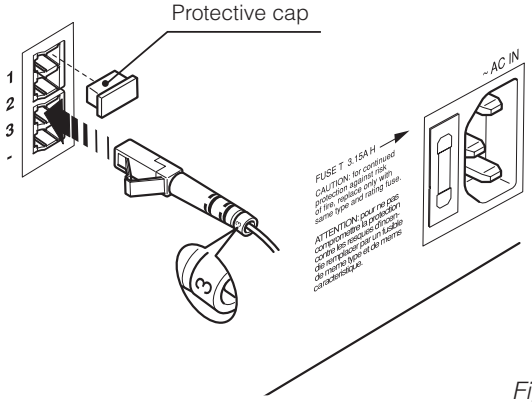

Fig.9

4 INSTALLATION

POSITIONING THE TWO UNITS

The HT500E-LINK system consists of two separate units (the DigiOptic™ Image Processor and the Projector), each of which is equipped with a power cable; the two units are interconnected by a 20 m fibre optic cable.

POSITIONING DIGIOPTIC™ IMAGE PROCESSOR

The ideal location for the DigiOptic™ Image Processor is on a cabinet shelf or on a rack (dimensions compatible with a standard 19" rack). Make sure that the support surface is stable and that the unit has sufficient space around it for ventilation purposes (at least 3 cm).
The unit is connected to the mains via an external power supply unit with an output of +7 Vdc; the unit's main power switch is on the power supply unit.Connect the power supply unit output cable to the POWER socket located on the rear panel *(Fig. 2)*.
Use exclusively the power supply unit provided with the system or an alternative power supply unit expressly approved by SIM2.

To mount the DigiOptic™ Image Processor on an equipment rack use the screws and RH / LH supports supplied with the appliance. Unscrew the screws that secure the cover to the DigiOptic™ unit base, position the RH and LH supports and fix into place with the supplied screws. To secure the unit to the rack use the supplied screws *(Fig.6)*.

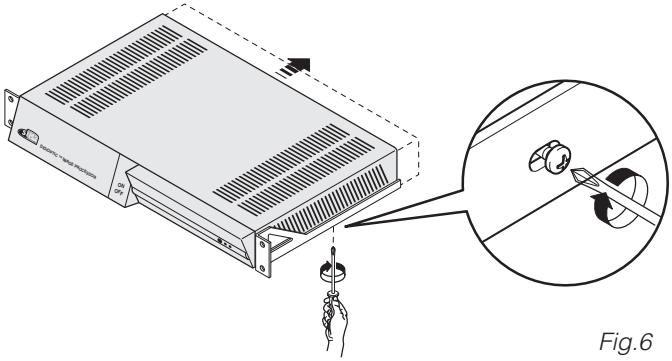

Fig.6

POSITIONING PROJECTOR

Position the projector on a stable, suitable platform or utilise the optional bracket for a fixed ceiling installation.

CAUTION: In the case of ceiling mounting using a suspension bracket, follow the instructions carefully and comply with the safety standards you will find in the box together with the bracket. If you use a bracket different to the one supplied by SIM2 Multimedia, you must make sure that the projector is at least 65 mm (2-9/16 inch) from the ceiling and that the bracket is not obstructing the air vents of the projector.

Position the projector the desired distance from the screen: the size of the projected image is determined by the distance from the lens of the projector to the screen and the zoom setting. See *ADDITIONAL INFORMATION* for more information.

PACKAGE CONTENTS

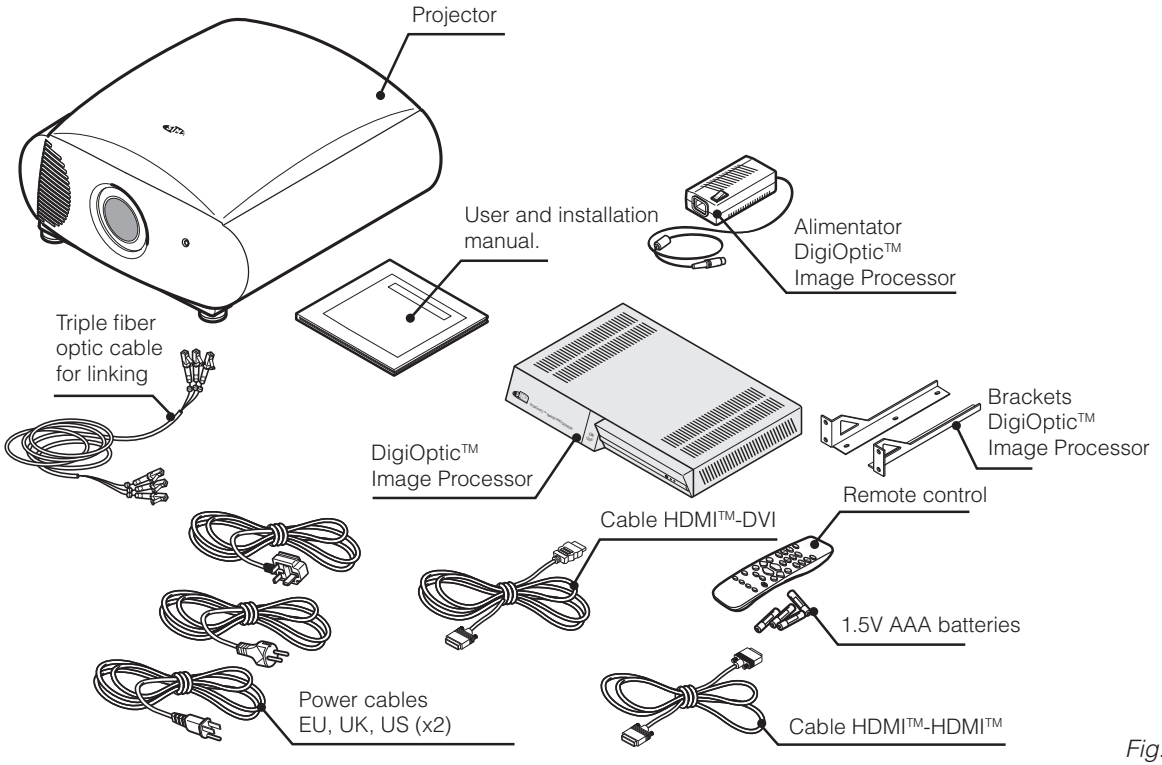

Fig.5

The carton should contain the following:
- the projector
- the DigiOptic™ Image Processor
- the remote control
- four 1.5V AAA batteries (for remote control)
- DigiOptic™ Image Processor power supply unit
- three power cables for the projector (EU, UK, USA)
- three power cables for the DigiOptic™ Image Processor (EU, UK, USA)
- triple fiber optic cable for linking DigiOptic™ Image Processor and the projector
- one cable HDMI™-HDMI™
- one cable HDMI™-DVI
- two brackets for mounting the DigiOptic™ Image Processor to the rack.
- the user and installation manual.

If any accessories are missing, contact your Dealer as soon as possible.

3 UNPACKING

To unpack the projector safely and easily please follow steps 1 to 5, as per drawing *(Fig. 4)*.

It is recommended that the carton and packaging is retained for future use and in the unlikely event that your projector needs to be returned for repair.

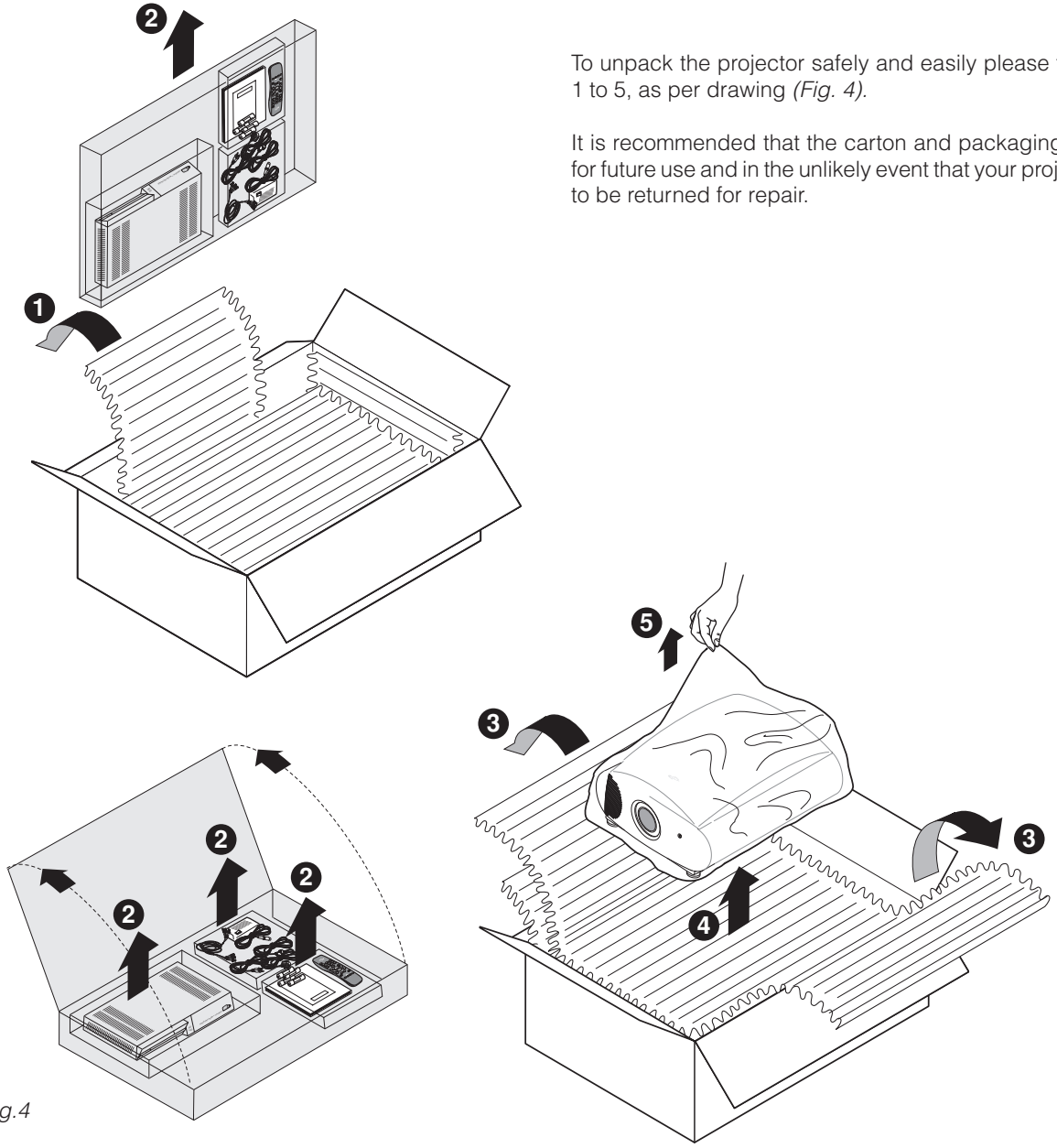

Fig.4

- **Beware of power supply cables.**
  Position the power supply cables so that they do not constitute an obstruction. Position the power supply cables where they cannot be reached by children. Install the units as close as possible to the wall electrical socket outlet. Do not tread on the power cables, make sure that they are not tangled or pulled; do not expose the power cables to heat sources; make sure that the power cables do not become knotted or kinked. If the power cables become damaged, stop using the system and request the assistance of an authorised technician.

- **Disconnect the apparatus from the mains power supply in the event of electrical storms and when not in use.**
  To avoid damage that could be caused by lightning striking in the vicinity of your home, disconnect the units in the event of electrical storms or when the system will remain unused for prolonged periods.

- **Avoid contact with liquids and exposure to humidity.**
  Do not use the units near water (sinks, tanks, etc.); do not place objects containing liquids on top of or near the units and do not expose them to rain, humidity, dripping water or spray; do not use water or liquid detergents to clean the units.

- **Prevent the units from overheating.**
  In order to allow the Projector cooling, keep at least 40 cm (16”) of space between the rear of the projector and the nearest wall or obstruction. Do not place the devices near heat sources such as heaters, radiators or other devices that generate heat (including amplifiers).
  Do not obstruct ventilation openings.
  Do not place the units in confined, poorly ventilated positions (bookcases, shelves, etc.).

- **Do not expose the eyes to the intense light emitted by the lamp.**
  Never look directly at the lamp through the ventilation opening when the unit is switched on.
  Risk of eyesight impairment. Ensure also that children do not look directly at the lamp.

- **Beware of the lens movements**
  Avoid positioning objects close the lens. The movements (horizontal and vetical) could be obstructed by objects, or damage may arise from the fall of the objects.

- **Position the unit on a stable surface.**
  To avoid serious injury to persons and damage to property, make sure the units are placed on a level, flat and stable surface from which they cannot fall, tip over or slide. Pay special attention if the units are placed on a trolley so that they can be moved around. Ensure that the units are not subjected to impact.

- **Do not insert objects through the units’ openings.**
  Make sure that no objects are inserted inside the units. If this should occur, disconnect the unit from the power supply immediately and call an authorised technician.

- **Energy Saving**
  When the system is left idle for a long period disconnect the Projector and the DigiOptic™ Image Processor from the main power supply.
  This precaution allows to save energy and to prevent wear and tear of the electronics devices.

- **Read this manual carefully and keep it in a safe place for future consultation.**
  This manual contains important information on how to install and use this equipment correctly. Before using the equipment, read the safety prescriptions and instructions carefully. Keep the manual for future consultation.

- **Do not touch internal parts of the units.**
  The units contain electrical parts carrying high voltages and operating at high temperatures. Do not remove the cover from the units, refer to qualified service personnel for all repair and maintenance requirements.
  The warranty will be automatically invalidated if the cover is removed from the units.

- **Power supply disconnect device.**
  The device for disconnecting the units from the mains power supply is constituted by the power cable plug. Ensure that the power cable plugs and the electrical mains socket outlets are easily accessible during installation operations. To disconnect the units from the electric power supply, pull the plug to remove it from the socket outlet. Do not pull the power cable.

- **Use only the specified type of mains power supply.**
  Connect the units to a mains electrical supply with rated voltage of between 100-240 VAC, 50/60 Hz and equipped with a protective earth connection. If you are unsure of the type of mains power supply in your home, consult a qualified electrician. Ensure that the power draw of the units is commensurate with the rating of the electrical socket outlets and any extension cables that are used.
  For the DigiOptic™ Image Processor use exclusively the power supply unit provided or an alternative power supply unit expressly approved by SIM2.

- **Connect the units to a mains electrical supply**
  Make the connection as shown in Fig.2

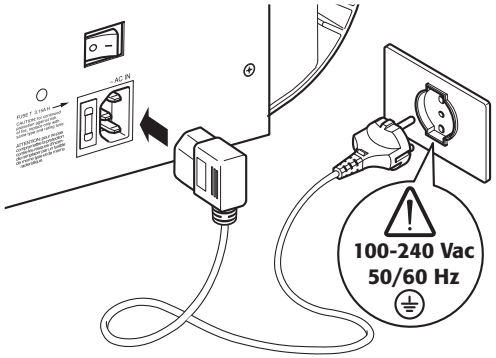

Fig. 1

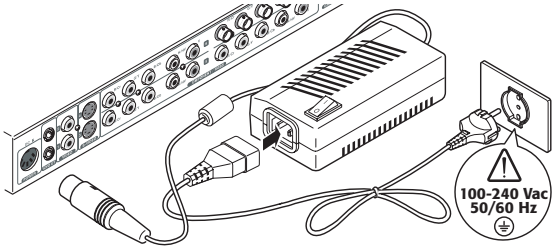

Fig. 2

- **Replace the safety fuse**
  Before making the replacement disconnect the appliance from the mains power supply.
  The fuse compartment is close to the mains power connector (Fig. 3). Use a slotted screwdriver to remove the fuse carrier (2) and replace the fuse (3). Insert a new spare fuse (4). Use only T 5A H fuses.

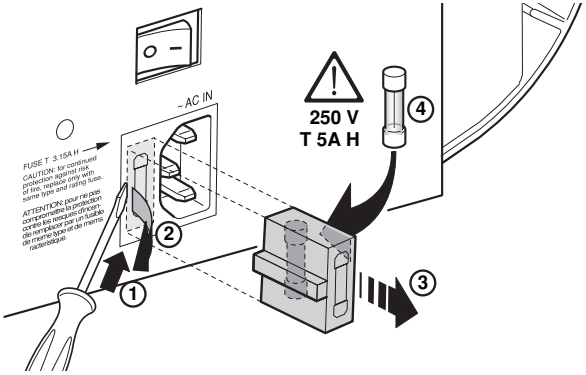

Fig. 3

PROJECTOR

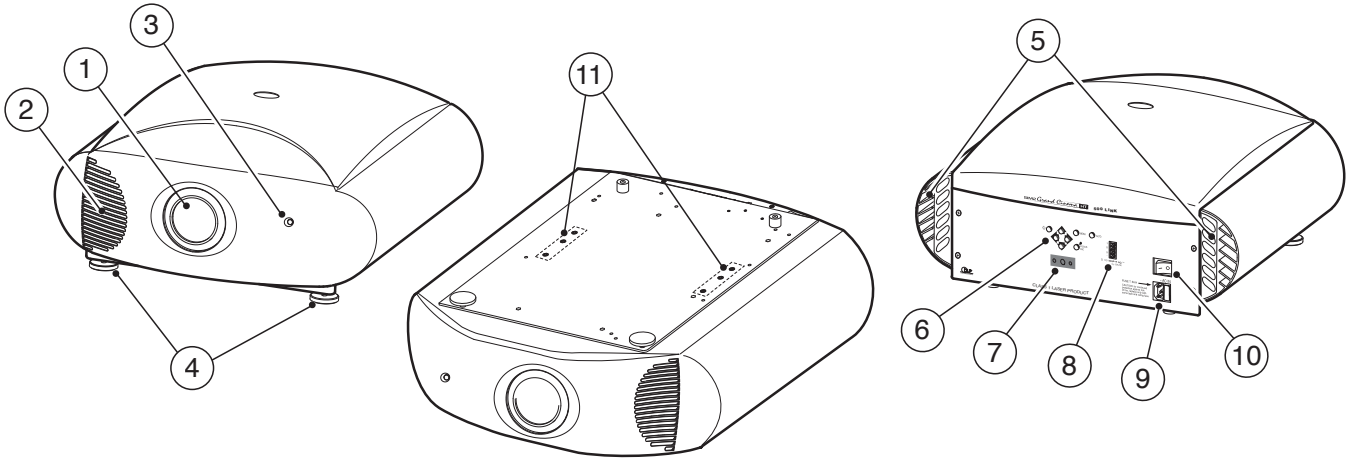

1 Projection lens
2 Cooling air inlet vents
3 Remote control IR sensor
4 Adjustable levelling feet
5 Cooling air outlet vents
6 Main functions keys
7 Remote control rear IR sensor and indicator LED
8 Fiber Optic cable connections
9 Fused power socket
10 Main power switch
11 Ceiling bracket fixing holes

DIGIOPTIC™ IMAGE PROCESSOR

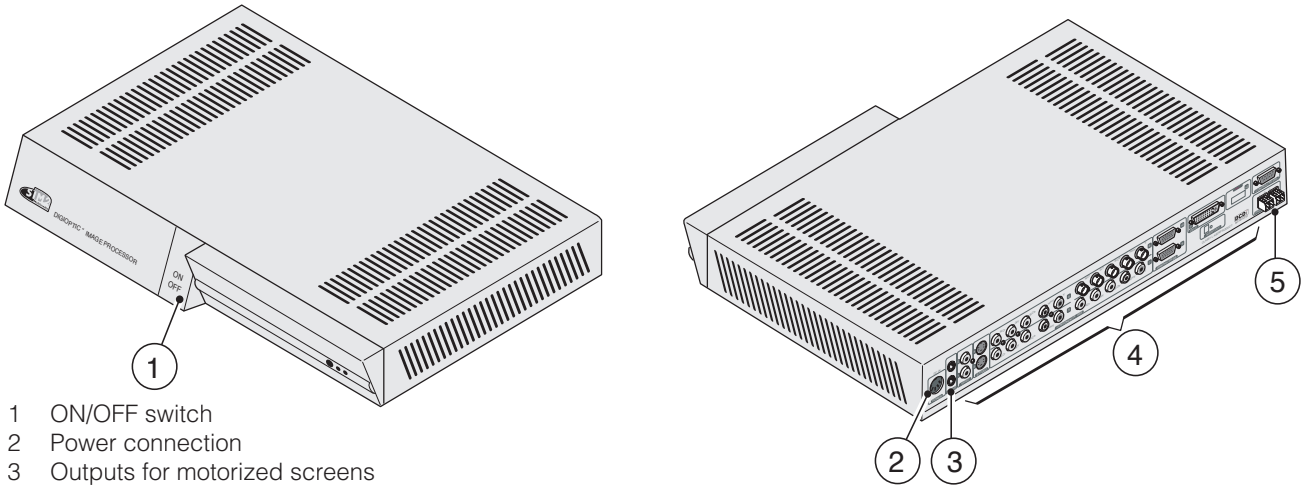

1 ON/OFF switch
2 Power connection
3 Outputs for motorized screens
4 Inputs and interfaces
5 Fiber Optic cable connections

2 IMPORTANT SAFETY INSTRUCTIONS

ATTENTION:
To reduce the risk of electric shock, disconnect the power supply cable on the rear panel before removing the top cover of the projector.
Refer to trained, authorised personnel for technical assistance.

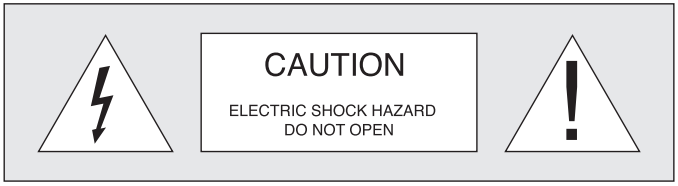

This symbol indicates the possible electric shock hazard associated with uninsulated live components in the interior of the unit.

This symbol indicates the presence of important instructions regarding use and maintenance of the product.

The HT500E-LINK system consists of two parts connected by a fibre optic cable: the DigiOptic™ Image Processor and the Projector. In this manual references to the “unit” refer to one of the two units that make up the system.

Prior to switching on the projector please read each chapter of this manual carefully as this manual provides basic instructions for using the projector.
The installation of the lamp assembly, preliminary adjustments and procedures that necessitate the removal of the top cover, must be carried out by authorised, trained technicians. There are no user serviceable parts inside.
To ensure safe and long term reliability please use power cables supplied with the projector. Observe all warnings and cautions.

CLASS 1 LASER PRODUCT
This product complies with fda radiation performance standards, 21 cfr chapter 1 subchapter j.
This product complies with european standard en 60825.
This product is classified as a class 1 laser product and there is no hazardous radiation with the safety protection.
Danger! Invisible laser radiation when open. avoid direct exposure to beam.
Do not open the covers of the product and never touch the internal parts in order to avoid exposure to visible or invisible laser radiation.

LAMP WARNING
If the lamp should suddenly break with a loud bang, air the room thoroughly before using it.
Do not replace the lamp: seek qualified technical assistance from your nearest Dealer.

• Federal Communication Commission (FCC Statement)
This equipment has been tested and found to comply with the limits for a Class B digital device, pursuant to Part 15 of the FCC rules.
These limits are designed to provide reasonable protection against harmful interference when the equipment is used in a commercial environment.
This equipment generates, uses and can radiate radio frequency energy and, if not installed and used in accordance with the instruction manual, may cause harmful interference to radio communications. However, there is no guarantee that interference will not occur in a particular installation.
If this equipment does cause harmful interference to radio or television reception, which can be determinated by turning the equipment off and on, the user is encuraged to try to correct the interference by one or more of the following measures:
- Reorient or relocate the receiving antenna
- Increase the separation between the equipment and receiver.
- Connect the equipment into an outlet on a circuit different from that to which the receiver is connected.
- Consult the dealer or an experienced radio/TV technician for help.

• For customers in Canada
This Class B digital apparatus complies with Canadian ICES-003.

• For customers in the United Kingdom
ATTENTION: This apparatus must be earthed
The wires in this mains lead are coloured in accordance with the following code:

Green-and-Yellow:	Earth
Blue:	Neutral
Brown:	Live

As the colours of the wires in the mains lead of this apparatus may not correspond with the coloured markings identifying the terminals in your plug proceed as follows:
The wire which is coloured green-and-yellow must be connected to the terminal in the plug which is marked by the letter E or by the safety earth symbol ⏚ or coloured green or green-and-yellow.
The wire which is coloured blue must be connected to the terminal which is marked with the letter N or coloured black.
The wire which is coloured brown must be connected to the terminal which is marked with the letter L or coloured red.

The HT500E-LINK system combines the signal processing capabilities of the DigiOptic™ Image Processor with the high fidelity reproduction of the DLP™ technology Projector by linking the two units via a fibre optic cable.

The DigiOptic™ Image Processor, which should be ideally located close to the signal sources, supports and processes a wide range of video signals, transmitting them to the Projector by means of a fibre optic link cable.

The large number of inputs available (2 Composite Video inputs, 2 S-Video inputs, up to 4 Component or RGB inputs, 2 graphic RGB inputs, 1 DVI-D input, 1 HDMI™ Input) ensures the system supports a wide variety of analogue and digital sources: DVD players, VCRs, satellite and terrestrial receivers, computers, game consoles, video cameras, etc.

The signal processing capabilities of the Image Processor ensure optimum reproduction of a broad range of input signals, from interlaced video to high definition and graphics.

Conversion of interlaced video signals to progressive signals by means of prestigious DCDi™ technology produces fluid, natural, images free of flicker and stairstepping artefacts.

Faithful reproduction of signals at higher resolutions (such as high definition video and graphics) occurs without loss of information or reduction of image sharpness thanks to the processor's high pixel rate signal acquisition capabilities.

Adaptation of the input signal resolution to the Projector resolution occurs without alterations of image quality, in accordance with an ample choice of aspect ratios, including several definable by the user. All image adjustments can be performed with the remote control with the aid of the *On Screen Display*; alternatively, the unit can be controlled by from a home automation system through the serial port.

Thanks to the new optical system based on three chip DMD™, the HT500E-LINK allows to take advantage from DLP™ technology, the Texas Instruments technology.
Each of the three DMD™ chip is dedicated to the modulation of one of the primary colors coming from the optical prism, the refl ected light, after combination by a second prism, is projected outside using an appropriate lens system.
The technology of the HT500E-LINK allows to obtain images without rainbow effect or any other type of artefact, in order to enjoy an even more realistic images

The two units are connected via a three-core fibre optic cable for transmission of the digital signal from the DigiOptic™ Image Processor to the Projector and control signals in both directions.

Transmission occurs without interference or attenuation over distances of up to 500 m.
Moreover, the flexibility and small size of the cable allow the maximum freedom when installing the system in your home.

SIM2 carries out comprehensive functional testing in order to guarantee the maximum product quality.
For this reason, when you start using the product lamp operating hours may already be at between 30 and 60.

In addition to the regular tests, the Quality Control department performs additional statistical tests at the time of shipment.
In this case the packing may show signs of having been opened, and the accumulated lamp operating hours may be slightly higher than the hours associated with the standard tests.

1 INTRODUCTION

Congratulations on your choice of the SIM2 Grand Cinema **HT500E-LINK** system!

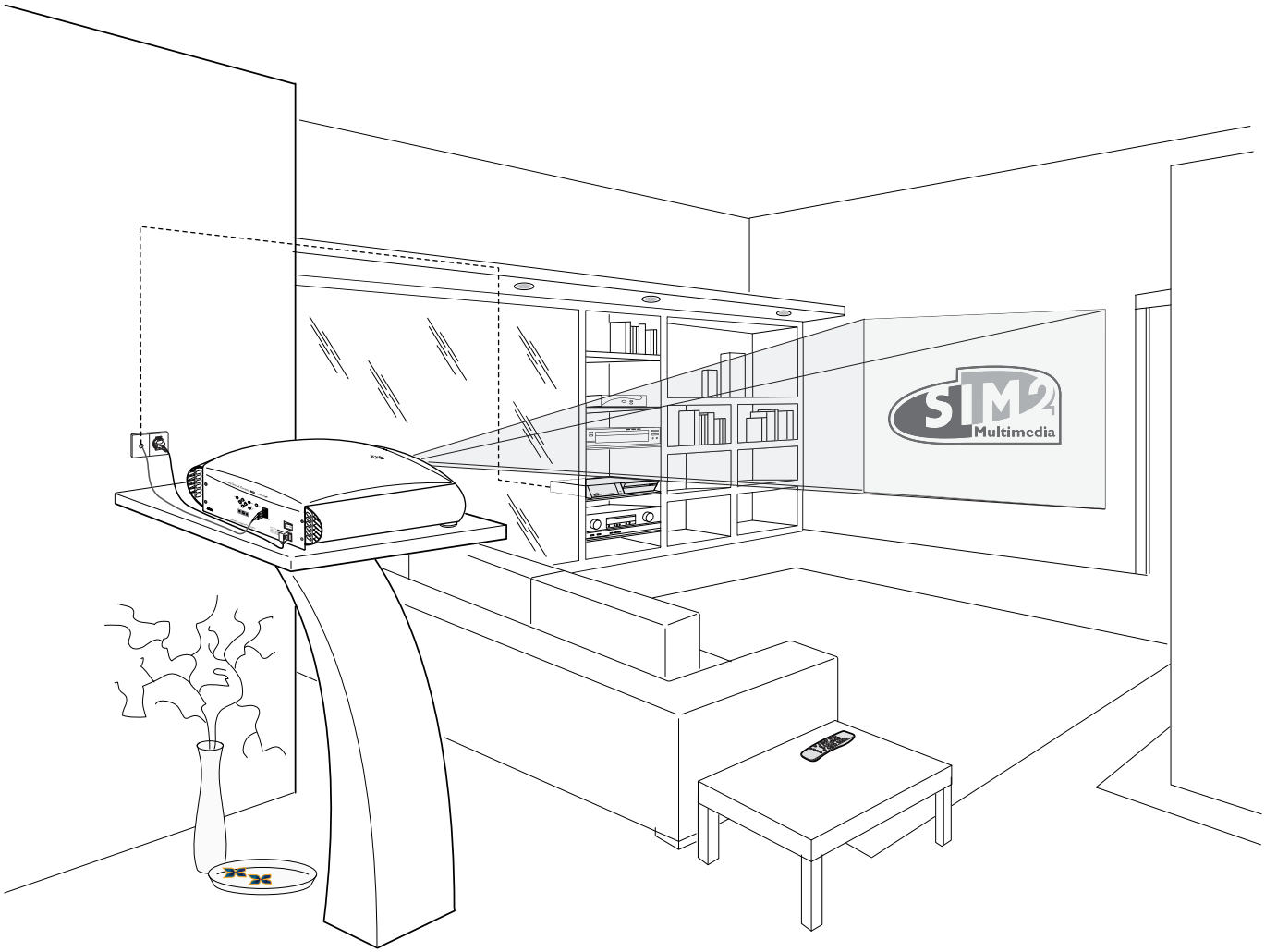

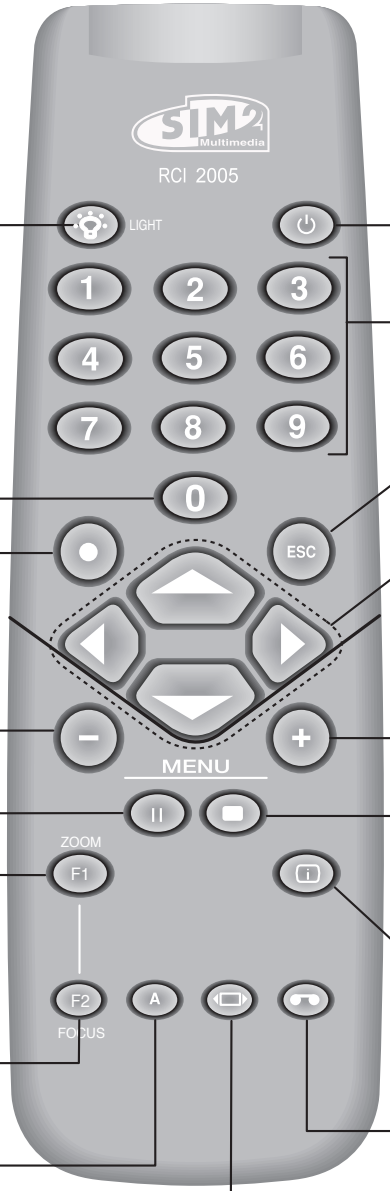

BACK LIGHT
Turns on the back light.

STAND-BY
Switches off to stand-by.

0-9 Keys
Switch on from stand-by and allow direct source selection.

SOURCE
Displays the Source Selection menu.

ESCAPE
Deactivates the On Screen Display.

Activates test pattern for Zoom and Focus adjustments

Up/Down/Left/Right Arrow keys
Navigate through and make adjustments to the On Screen menus.
Arrow Up/Down activate Quick menus.

MENU -
Activates the On Screen Display menus.
Navigates menu pages.

MENU +
Activates the On Screen Display menus.
Navigates menu pages.

FREEZE
Freezes a moving picture.

MEMORIES
Activates Memories menu

F1
Select lens zoom adjustment

INFO
Displays the selected source information and the projector status.

F2
Select focus lens adjustment

VCR
Improves the video recorder signals quality.

AUTO
Selects Auto Adjust (automatic optimisation of the displayed image).

ASPECT
Selects image Aspect ratio.

SIM2 Grand Cinema HT

User and Installation Manual
The home theater projector

HT500E-LINK

SIM2 Multimedia

cod.46.0427.000